KENWOOD

SERVICE MANUAL

Model TS-770

V-UHF ALL MODE DUO BANDER

CONTENTS / FEATURES

FEATURES 2
CIRCUIT DESCRIPTION 3
SEMICONDUCTOR/FILTER DATA 15
OPTION(BU-1) 16
OUTSIDE VIEWS 17
PACKING 19
PARTS LIST 20
BLOCK DIAGRAM 34
PC BOARD VIEWS 35
DISASSEMBLY 49
TROUBLE SHOOTING 54
ADJUSTMENTS 56
LEVEL DIAGRAM 76
CIRCUIT DIAGRAM 80
REFERENCE DATA 84
MEMO 86
SPECIFICATIONS 89

FEATURES

1. 144/430 MHz, all mode (FM, SSB (USB, LSB), CW) transceiver.
- Microprocessor controlled VFO and full variety of auxiliary functions.
- FM circuitry based on KENWOOD's advanced technology and outstanding SSB quality.
- Built-in VOX.
- Built-in side tone and CW circuitry capable of semi-break-in operation.
- Easy-to-operate 1 band, 1 MHz VFO stops at 999.98 kHz or is continuously adjustable (endless system).

2. Built-in digital display that indicates operating frequency in all modes.
- Digital display equipped with easy-to-read green phosphor tubes.
- 7-digit digital display that directly reads down to 100 Hz.
- Frequency indicator that reads out carrier positions when mode of operation is changed.
- Indicates fixed channel (stores any given frequency) and call channel frequencies, besides VFO A and B frequencies.
- Digital display indicates which VFO (A or B) is in use, fixed channel numbers (1 through 8).
- The use of display select circuit turns off the 100 Hz digits in FM mode.

3. Dependable electrical and mechanical functions.
- VFO frequencies are switchable in 2 speeds, SLOW (in 20 Hz steps) and FAST (in 200 Hz steps).
- VFO knob equipped with variable torque mechanism.
- Pushbutton band select switches (UP and DOWN) that shift up and shift down frequency between 144 MHz and 440 MHz in 12 bands at 1 MHz intervals.
- Wide band design for both transmitter and receiver that eliminates the need for tuning the RF circuits.
- Panel layout based on human engineering.
- Full variety of indicating functions to check operating conditions (Pilot lamps: ON AIR, Hi/LOW (FM transmit), F-LOCK, RIT, SLOW/FAST, Back-up power ON/OFF).
- Amplified type AGC and ALC circuits that maintain receive and transmit outputs at constant level without distortion.

4. A multitude of auxiliary functions for more enjoyable operation.
- The use of RAM memory system microprocessor enables any given frequencies to be stored in or cleared from fixed channels (8 CH).
- Built-in back-up power circuit to keep data stored at all times.
- Built-in scan and search circuits.
- RIT circuit functions on VFO, fixed channels and call channel.
- Adoption of frequency lock circuit.
- KENWOOD's unique noise blanker (NB) circuit to eliminate pulse type noise.
- Equipped with two meters, one is an "S" meter (with RF/ALC selector) and the other is a center meter for use on FM.
- RF power HIGH/LOW selecting function provides convenience in transmission with local stations.
- Auxiliary (AUX) socket.

5. Designed for fixed and mobile station services.
- AC/DC 2-way power operation.
- Equipped with a grip for carrying convenience.
- Sufficient AF output power (2.5W/4Ω).
- Built-in large sized speaker (7.5 cm). External speaker connecting jack.

CIRCUIT DESCRIPTION

GENERAL

This unit is a high class home transceiver having All Mode VHF (2 m) UHF (70 cm) Bands designed for amateur radio stations.

By microcomputer control, it covers the amateur bands of 144 MHz ~ 146 MHz, 430 MHz ~ 440 MHz. The modes of the radio waves are A_1, A_{3j}, and F_3.

FREQUENCY CONFIGURATION

The unit consists of frequency composition shown in Fig. 1. In Table 1, the oscillating frequencies of each oscillating circuit are shown.

Table 1. Oscillator frequency of each oscillator circuit

Unit	Mode/Frequency	Oscillator Frequency
CAR unit	USB, C W – R	8.8315 MHz
	LSB	8.8285 MHz
	FM	8.830 MHz
	CW-T	8.8307 MHz
IF unit	USB, LSB, CW	30.430 MHz
IF unit (MIX unit)	430 MH band	15.8888 × 18 MHz
		16.1666 × 18 MHz
IF unit	FM TX	21.6 MHz
RF unit	FM RX	22.055 MHz
VCO unit	All mode	122.4 ~ 127.4 MHz

With the exception of FM transmission, all modes adopt the double conbersion system.

In SSB or CW transmit mode, the CAR oscillator frequency (8.83 MHz) is modulated by audio signal to obtain 8.83 MHz in the 1st IF. This signal is mixed with 30.43 MHz to obtain 21.6 MHz in the 2nd IF.

In FM transmit mode, the 21.6 MHz crystal oscillator circuit in the IF unit is directly modulated.

The 122.4 MHz band of VCO is mixed with the 21.6 MHz of the 2nd IF to obtain a 144 MHz band heterodyne signal which is fed to the final unit. The 430 MHz band heterodyne signal is mixed with the 286 MHz (or 291 MHz) band, 15.8888 MHz (or 16.1666 MHz) local oscillator frequency multiplied by 18, and the VCO frequency of 122.4-127.4 MHz to obtain a heterodyne signal of 408.4-418.4 MHz. This signal is mixed with 21.6 MHz to obtain a signal of 430 MHz band which is fed to the final unit.

In receive mode, the signal is RF amplified and mixed with the band heterodyne signal to obtain 21.6 MHz in the 1st IF. In SSB or CW mode, the signal is mixed with 30.430 MHz to obtain 8.83 MHz in the 2nd IF.

In FM mode, the signal is mixed with 22.055 MHz to obtain 455 kHz in the 2nd IF.

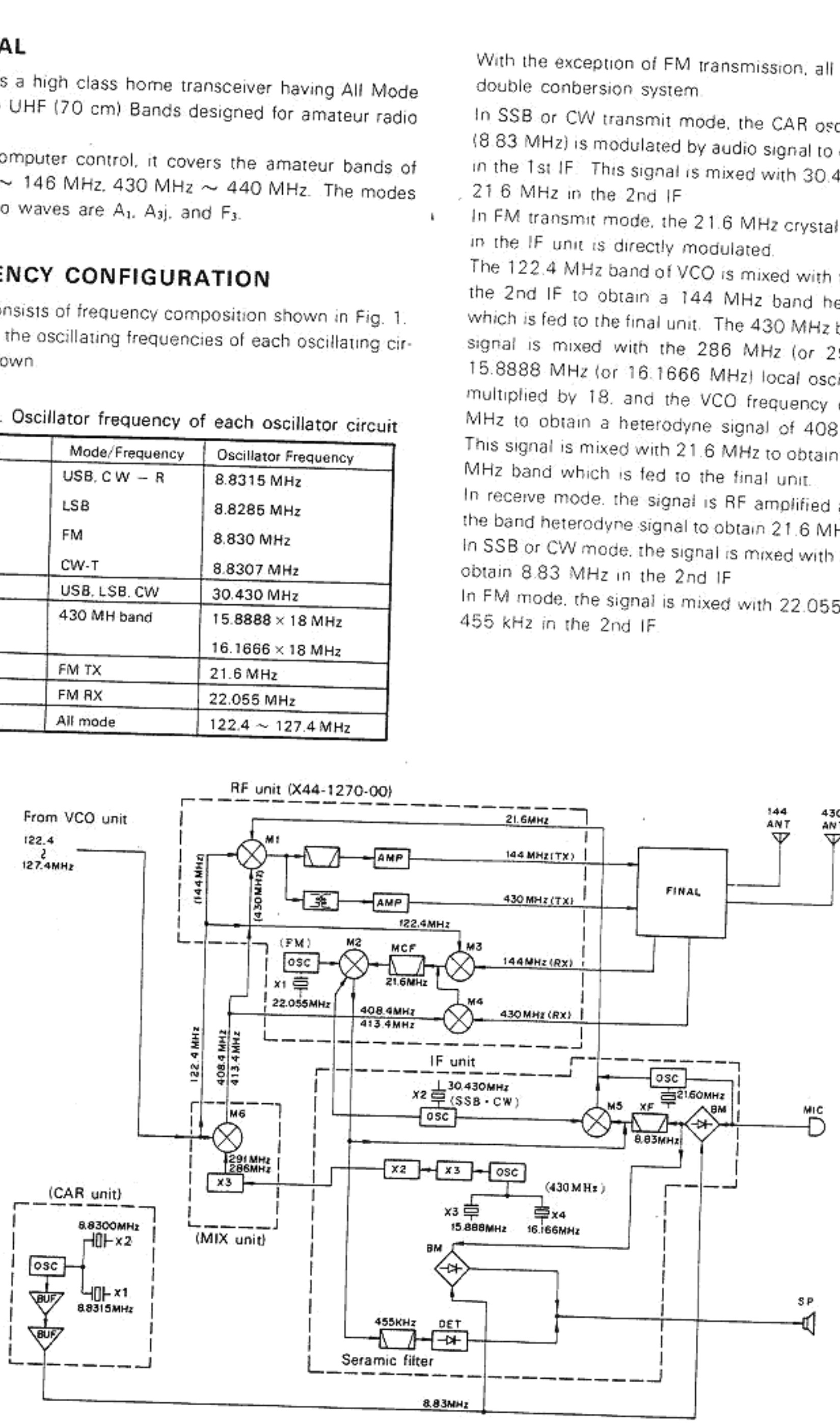

Fig. 1 Frequency configuration

CIRCUIT DESCRIPTION

Table 16. Functions of Digital Unit IC38 MN 9004

Pin No.	Pin	Input signal	Output signal	Description
1	VSS	○		Earth.
2	CO11		○	Count prohibited at FIX channel, scan, band and H.H.
3	CO10		○	H at scan, search, empty FIX channel.
4	CO9		○	H at scan.
5	CO8		○	Buzzer output, FIX channel, figure latch, strobe signal.
6	GO7		○	Buzzer output, FIX channel, figure latch, strobe signal.
7	CO6		○	Delivers output execpt at 20 μSec selector signal
8	CO5		○	
9～13	CO4～0		○	Strobe signals of 100 kHz, 10 kHz, 1 kHz, 100 Hz, 10 Hz.
14～17	AI 3～0	○		A input
18～21	BI 3～0	○		B input
22～25	E00～3		○	Data outputs of 100 kHz, 10 kHz, 1 kHz, 100 Hz, 10 Hz.
26	TST	○		Not used, open.
27	RST	○		H level
28	CSLCT	○		Same as pin 2
29	SNSO	○		
30	SNSI	○		Count input
31～34	DO0～3		○	Band data, binary output.
35～38	DO4～7		○	FIX channel figure, binary output.
39	VDD	○		5V
40	OSC	○		Clock signal, 400 kHz

Table 17. Functions of Digital Unit (X54-1460-00)

Pin		Input signal	Output signal	Description
J2	CA		○	Normally grounded.
	F1	○		Open at FIX, normally grounded.
	9B	○		H at display of 9th digit.
	F2		○	L at FIX, VFO-B, H at VFO-A.
J3	DD		○	} Digial display output. Data output by time division.
	DC		○	
	DB		○	
	DA		○	
	B1	○		Frequency disappears at FIX empty.
	SA		○	} Digit scan signal.
	SB		○	
	SC		○	
J4	F	○		L at FIX empty.
	PC		○	} PLL band data output. Output of 1～5 at binary code.
	PB		○	
	PA		○	
	SN	○		H at scan ON, normally L.
	FM2			
	SD	○		H at FAST + 10 kHz, S/F LED ON.
	SQ	○		L at squelch ON, H at OFF.
	F3	○		L at VFO A, B.
	F1	○		Open at FIX, normally grounded.
	SF	○		L by SLOW, FAST switch. Normally open.
	CC	○		Normally grounded.
	LK	○		L at F lock, normally open.
J5	CB	○		VFO end or endless signal.
	SH	○		H at search switch ON.
	ME	○		H at FIX, memory switch ON.
	V5	○		
	V4	○		} VFO pulse
	V3	○		
	V2	○		
	V1	○		
J6	ATX		○	
	ST		○	H at FIX empty, scan, search.
	UH		○	100 MHz → 1 and 10 MHz → 4 at L. 100 MHz → 4 and 10 MHz → 3 at H.
	291		○	H at 435～439. 144 MHz band at L.
	286		○	H at 430～434. 144 MHz band at L.
	BZ		○	H at buzzer ON.
	RL	○		8V input at TX.
J7	BP	○		Normally 13.8V. More than 7.5V at backup time.
	Z	○		5V
J8	01～03		○	} Frequency data output to PLL.
	10～13		○	
	20～23		○	
	30～33		○	
	40～43		○	
J9	FC	○		L at press of FIX.
	UD	○		Band stops at FIX. Open at FIX.
	BD	○		L at press of band DOWN.
	BU	○		L at press of band UP.

CIRCUIT DESCRIPTION

(From page 11.)

a Selector signal output to IC34 and 35.
b. Transmit prohibit signal at scan, search and FIX empty.
c Latch strobe signal.
d 10 Hz ~ 100 kHz data output.
e. Band data output.
f FIX channel figure output.
g Buzzer pulse output.

ALL ASS'Y UNIT (X60-1050-00)

The PLL circuit includes VCO, A LOOP and B LOOP units.

1. B LOOP Unit

A signal of 13.215 MHz is oscillated by Q4. The 10 and 100 kHz data from the digital unit are converted into an analog signal as a bias signal to D2 by the resistors R25-37 to control the frequency of 0-980 Hz. The frequency is doubled by Q5 as a HET signal to the B LOOP. Q1 is VCO oscillator for B LOOP. The signal from the oscillator passes through the buffer Q3 and is mixed with CAR 8.83 MHz by IC1, then the frequency difference is mixed with HET signal for B LOOP by IC2 The1 kHz-100 kHz data from the digital unit is divided by IC3 to produce 1 kHz signal. This signal is compared in phase with the reference signal from A LOOP by IC4. The output passes through the low pass filter Q6-8 to produce VCO control voltage for B LOOP to control Q1.
The output from Q1 passes through the buffer Q2 to produce the output to B LOOP.

2. A LOOP

A signal of 14.190 MHz is oscillated by Q1. This signal is doubled by Q2 and tripled by Q3 to produce HET signal for A LOOP The signal from the VCO unit is mixed with the HET signal by IC1, amplified by IC2 and then mixed with the signal from B LOOP by IC3.
The BAND data from the digital unit is fed to IC4 so that the signal from IC3 is divided into 100 kHz.
A signal of 8 MHz is oscillated by IC5. This signal is divided to obtain 100 kHz signal as reference signals for B LOOP and A LOOP, and is compared in phase by IC6. The output from IC6 is VCV which ontrols VCO of the VCO unit.
Analog signal from the BAND data is obtained from IC7. This signal is tuned by T1 and T2 to obtain 5 MHz bandwidth
When the signal is unlocked, D4 or D5 is ON, producing UK signal of H level

3. VCO Unit (X50-1520-00)

Frequencies are controlled by the VCV voltage of VCO (Q1).
The signal passes through the buffer Q2 and is fed to A LOOP
Q3 and Q4 form the buffer of VCO. When the signal is unlocked, the UK signal turns Q9 to ON and turns Q8 to OFF, so the buffer stops and no output is obtained from the VCO terminal.
Q5 and Q6 form a circuit to short the VCV terminal when the voltage at PL8 drops momentarily.

When the signal is unlocked during adjustments or repairs, turn OFF the power switch and then turn ON. The signal will then be locked

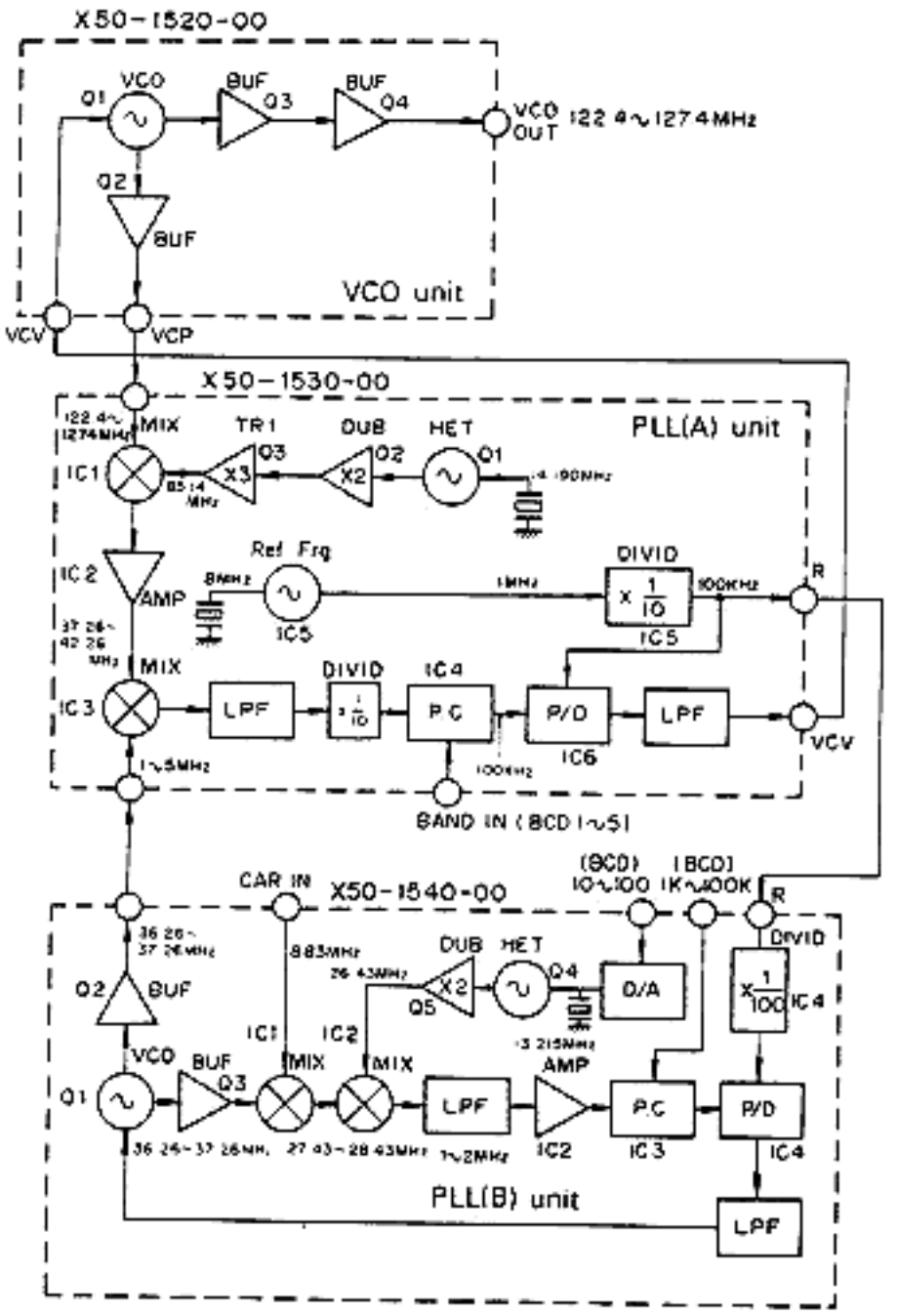

Fig. 18 Block diagram of PLL unite

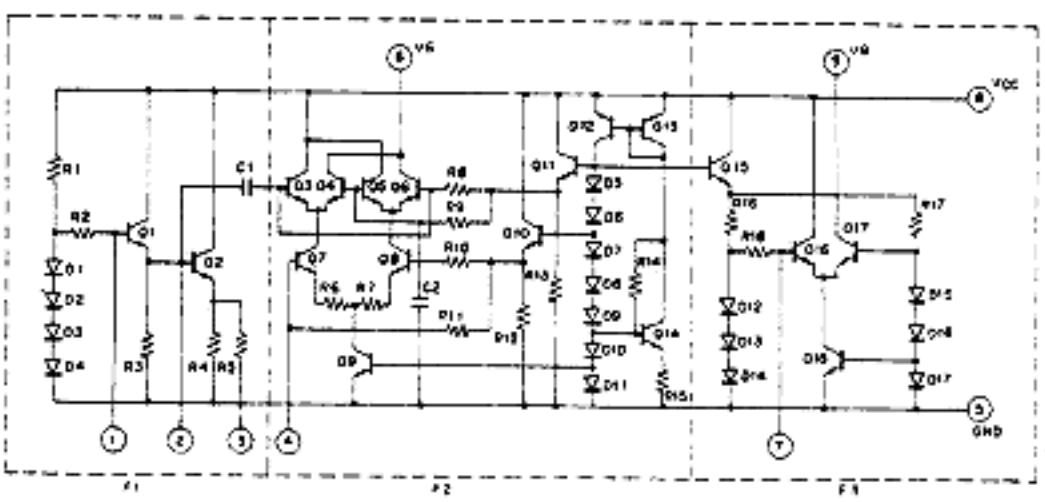

Fig. 19 PLL(A)IC3 PLL(B)IC2(TA7310P)

CIRCUIT DESCRIPTION

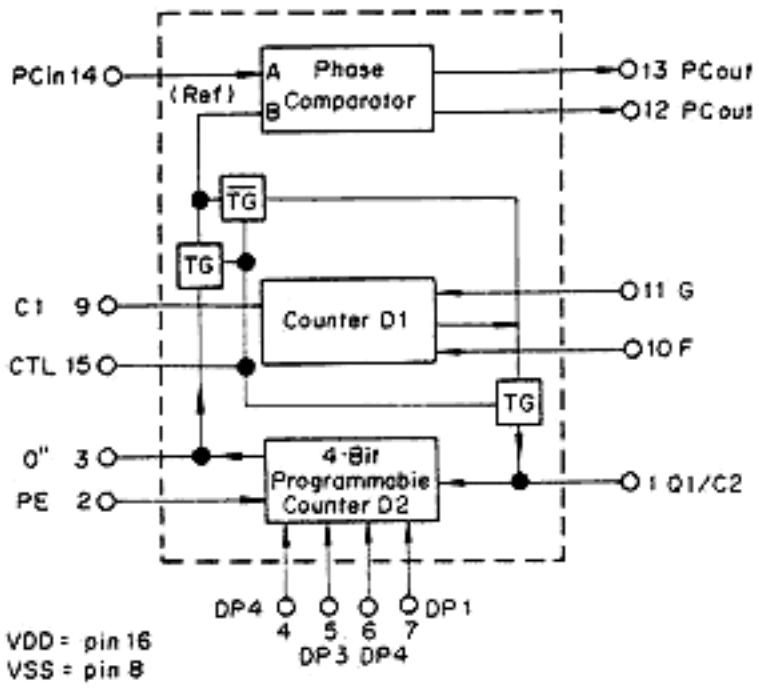

Fig. 20 PLL(B)IC4(MC14568B)

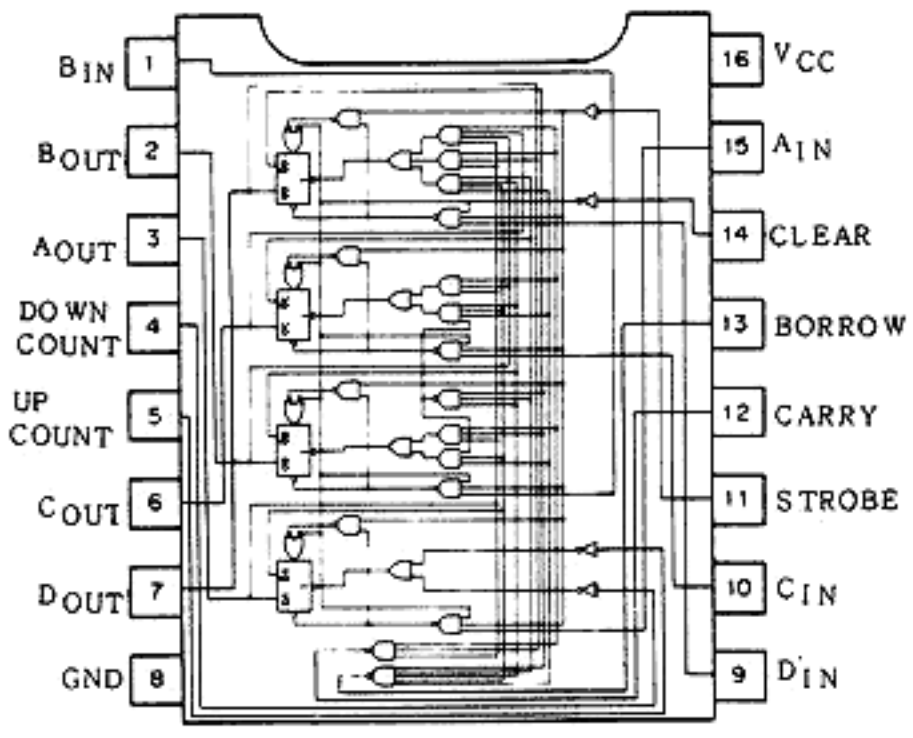

PLL(A)IC4(TD34192BP)

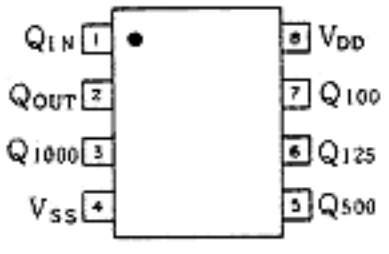

PLL(A)IC5(SM6422A)

Fig. 21

Truth Table TD34192BP

Input tn								Output tn+1					
Count -up pulse	Count -down pulse	Strobe	Clear	Input				Output				Borrow	Carry
				A	B	C	D	A	B	C	D		
*	*	0	0	AIN	BIN	CIN	DIN	AIN	BIN	CIN	DIN	Note1	Note1
*	*	0	0	1	0	0	1	1	0	0	1	Note1	Note1
*	*	*	1	*	*	*	*	0	0	0	0	Note1	Note1
1	1	1	0	*	*	*	*	1	0	0	0	1	1
2	1	1	0	*	*	*	*	0	1	0	0	1	1
3	1	1	0	*	*	*	*	1	1	0	0	1	1
4	1	1	0	*	*	*	*	0	0	1	0	1	1
5	1	1	0	*	*	*	*	1	0	1	0	1	1
6	1	1	0	*	*	*	*	0	1	1	0	1	1
7	1	1	0	*	*	*	*	1	1	1	0	1	1
8	1	1	0	*	*	*	*	0	0	0	1	1	1
9	1	1	0	*	*	*	*	1	0	0	1	1	0
0	1	1	0	*	*	*	*	0	0	0	0	1	1
1	1	1	0	*	*	*	*	1	0	0	0	1	1
↕	↕	↕	↕	↕	↕	↕	↕	↕	↕	↕	↕	↕	↕
8	1	1	0	*	*	*	*	0	0	0	1	1	1
9	1	1	0	*	*	*	*	1	0	0	1	1	1
1	8	1	0	*	*	*	*	0	0	0	1	1	1
1	7	1	0	*	*	*	*	1	1	1	0	1	1
1	6	1	0	*	*	*	*	0	1	1	0	1	1
↕	↕	↕	↕	↕	↕	↕	↕	↕	↕	↕	↕	↕	↕
1	1	1	0	*	*	*	*	1	0	0	0	1	1
1	0	1	0	*	*	*	*	0	0	0	0	0	1
1	9	1	0	*	*	*	*	1	0	0	1	1	1

Note 1: The state of BORROW Output and CARRY Output will depend on the state of A, B, C, D Output and Down Count/Up Count Inputs.
2: * ; 0 or 1
3: tn ; Bit time prior to the time the clock input changes from "0" to "1".
4: Tn+1 ; Bit time after the clock input changed from "0" to "1".

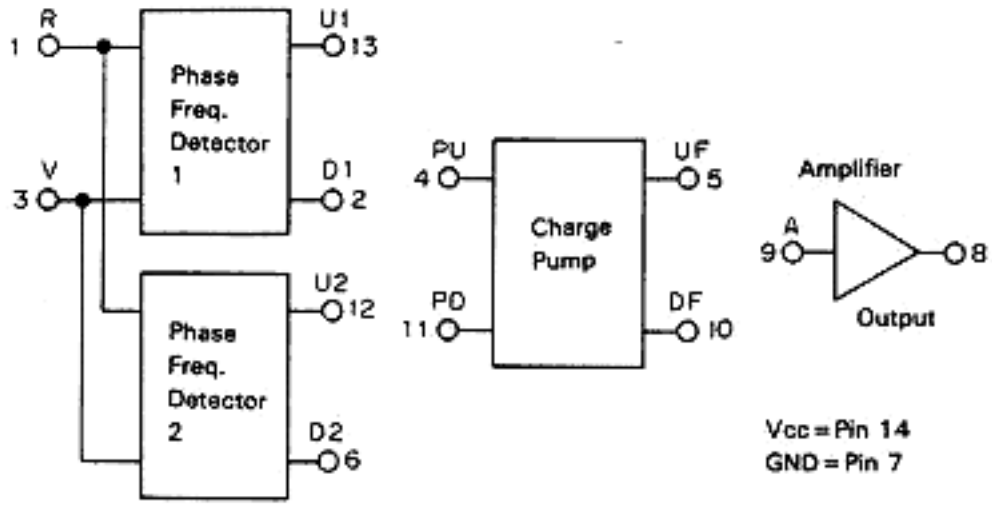

Fig. 22 PLL(A)IC6(MC4044P)

SEMICONDUCTOR/FILTER DATA

* In case of replacing power transistors of the FINAL, always use those based on TRIO Specifications.

Table 18. 2SC2381 Ratings

Name	2SC2381, TRIO									
Application	UHF band power amplifier									
Construction	NPN Epitaxial planar type									
Absolute maximum rating (T_a = 25°C)	V_{CBO}	V_{CEO}	V_{EBO}	I_C	I_E	P_C	T_j	T_{stg}		
	35	17	3.5	6	−6	50	175	−65~175		
	V	V	V	A	A	W	°C	°C		
Test condition	T_a = 25 ± 1.5 °C									

Test specification

Item	Condition	Code	Max	Min	Unit
Collector cut-off current	V_{CB} = 15 V, I_E = 0	I_{CBO}	—	1	mA
Collector-base break down voltage	I_C = 10mA, I_E = 0	$V_{(BR)CBO}$	35	—	V
Collector-emitter break down voltage	I_C = 25mA, I_B = 0	$V_{(BR)CEO}$	17	—	V
Emitter-base break down voltage	I_E = 1 mA, I_C = 0	$V_{(BR)EBO}$	35	—	V
DC amplifier factor	V_{CE} = 5 V, I_C = 3 A	h_{FE}	10	—	—
Collector output capacity	V_{CB} = 10V, I_E = 0, f = 1MHz	C_{ob}	—	—	PF
Output power	V_{CC} = 12.6 V, f = 470 MHz P_i = 10W, $\eta_C \geq$ 60%	P_O	25	—	W

Table 19. 2SC2380 Ratings

Name	2SC2380, TRIO									
Application	UHF band power amplifier									
Construction	NPN Epitaxial planar type									
Absolute maximum rating (T_a = 25°C)	V_{CBO}	V_{CEO}	V_{EBO}	I_C	I_E	P_C	T_j	T_{stg}		
	35	17	3.5	2.8	2.8	30	175	−65~175		
	V	V	V	A	A	W	°C	°C		
Test condition	T_a = 25 ± 1.5 °C									

Test specification

Item	Condition	Code	Max	Min	Unit
Collector cut-off current	V_{CB} = 15 V, I_E = 0	I_{CBO}	—	1.5	mA
Collector-base break down voltage	I_C = 2 mA, I_E = 0	$V_{(BR)CBO}$	35	—	V
Collector-emitter break down voltage	I_C = 10mA, I_B = 0	$V_{(BR)CEO}$	17	—	V
Emitter-base break down voltage	I_E = 200 μA, I_C = 0	$V_{(BR)EBO}$	3.5	—	V
DC amplifier factor	V_{CE} = 5 V, I_C = 1.5 A	h_{FE}	10	—	—
Collector output capacity	V_{CB} = 10V, I_E = 0, f = 1MHZ	C_{ob}	—	40	PF
Output power	V_{CC} = 12.6 V, f = 470MHz P_i = 3 W, $\eta_C \geq$ 60%	P_O	11	—	W

Table 20. 2SC2103A Ratings

Name	2SC2103A, TRIO									
Application	UHF band power amplifier									
Construction	NPN Epitaxial planar type									
Absolute maximum rating (T_a = 25°C)	V_{CBO}	V_{CEO}	V_{EBO}	I_C	I_E	P_C	T_j	T_{stg}		
	40	18	4.0	6.0	−6.0	50	175	−65~175		
	V	V	V	A	A	W	°C	°C		
Test condition	T_a = 25 ± 1.5 °C									

Test specification

Item	Condition	Code	Max	Min	Unit
Collector cut-off current	V_{CB} = 15 V, I_E = 0	I_{CBO}	—	1	mA
Collector-base break down voltage	I_C = 10mA, I_B = 0	$V_{(BR)CBO}$	40	—	V
Collector-emitter break down voltage	I_C = 25mA, I_B = 0	$V_{(BR)CEO}$	18	—	V
Emitter-base break down voltage	I_E = 1 mA, I_C = 0	$V_{(BR)EBO}$	4	—	V
DC amplifier factor	V_{CE} = 5 V, I_C = 3 A	h_{FE}	10	—	—
Collector output capacity	V_{CB} = 10V, I_E = 0, f = 1 MHz	C_{ob}	—	80	PF
Output power	V_{CC} = 12.5 V, f = 175 MHz P_i = 4.2W, $\eta_C \geq$ 60%	P_O	27	—	W

Table 21. Filter L72-0312-05(CFL-455F2)Ratings

Item	Specification
Nominal center frequency	455 kHz
3 dB bandwidth	±5 kHz or more
6 dB bandwidth (From 455 kHz)	±7.5 kHz or more
70 dB bandwidth	±16 kHz or less
Guaranteed attenuation	55 dB or more 40 dB or more
Ripple	3 dB or less
Loss	4 dB or less
Impedance	1.5 kΩ

FILTER/OPTION DATA

Table 22. Ratings of Crystal Filter L71-0209-05(21G20A)

Item	Specification
Nominal center frequency	21.6 MHz
Pass bandwidth	±10 kHz or more at 3 dB
Attenuation bandwidth	±35 kHz or less at 18 dB
Ripple	0.5 dB or less
Loss	2 dB or less
Guaranteed attenuation	30 dB or more at a range within ±1 MHz (The spurious output shall be at 18 dB or more.)
Terminal impedance	2 kΩ±10%//1PF±10%

Table 23. Ratings of Crystal Filter L71-0208-05(YK-88S)

Item	Specification
Nominal center frequency	8830 kHz
Center frequency deviation	Within ±150 Hz at 6 dB
Pass bandwidth	±1.2 kHz or more at 6 dB
Attenuation bandwidth	±1.5 kHz or less at 20 dB ±2.2 kHz or less at 60 dB ±3 kHz or less at 80 dB
Ripple	2 dB or less
Loss	6 dB or less
Guaranteed attenuation	80 dB or more within ±1 MHz.
Impedance	600Ω±5% // 15PF±5% for both input and output

Option

- BU-1 (Outside Battery Case)

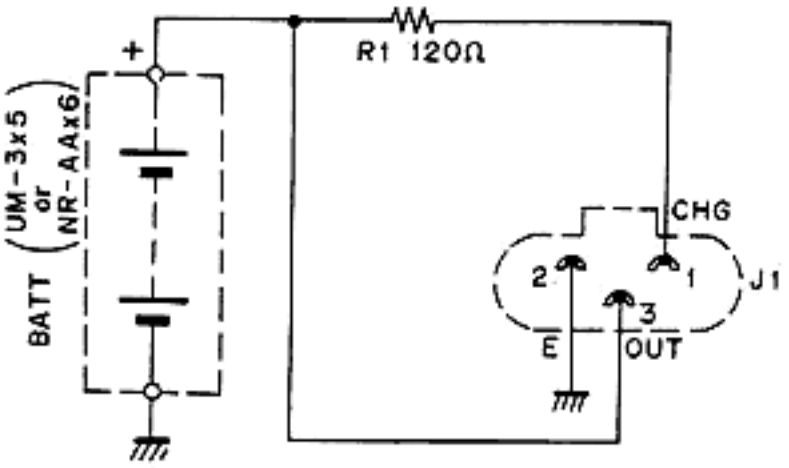

Fig. 26 BU-1 Circuit

Table 25. BU-1 Parts List

Parts Name	Parts No.	Remarks
Resistor (R1)	RC05GF2H121J	120Ω ±5% 1/2W
Power Jack (J1)	E 08 — 0304 — 05	
Power Plug	E 30 — 1624 — 05	
Battery case	J 19 — 1319 — 03	
Dummy cell	W 09 — 0002 — 05	

In order to operate by DC

Since this unit is not equipped with DC power source cable, in case of DC operation, it is necessary to prepare a DC power source cable like the one shown in Fig. 25.
Since this cable is not equipped with a fuse, in case it is used as that for TS-770, insert an 8A fuse.
DC power source cable and fuses are handled by our business offices or service centers.

DC cable ASSY parts No. X42-1210-00

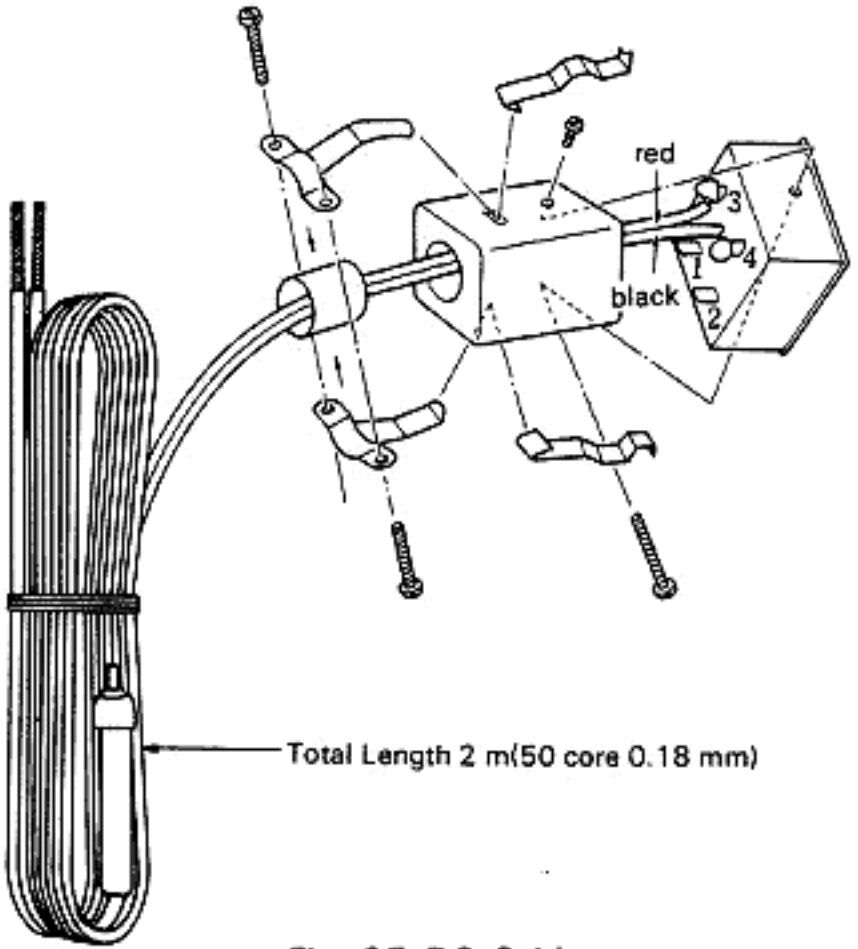

Fig. 25 DC Cable

OUTSIDE VIEWS

FRONT PANEL

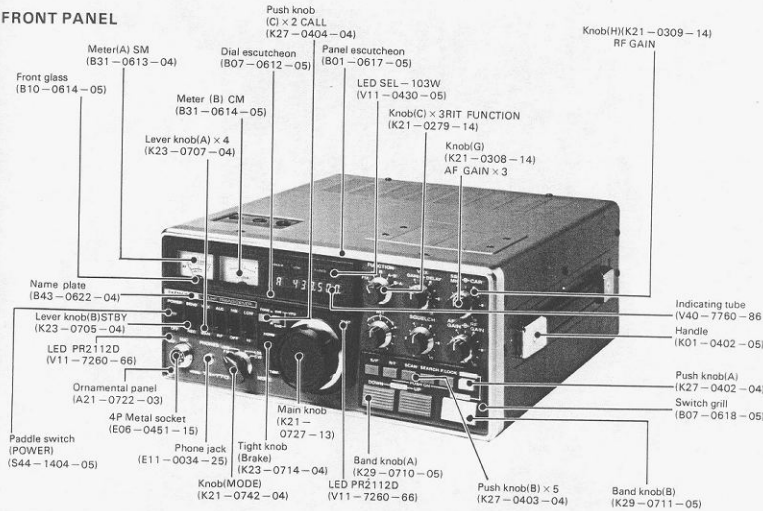

REAR PANEL

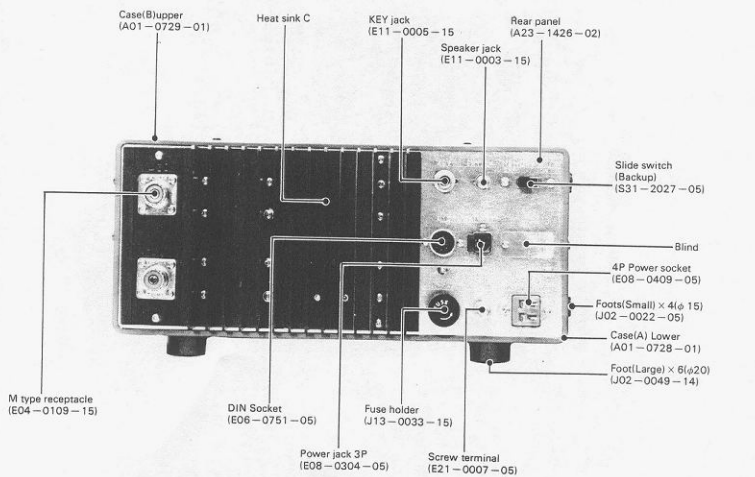

INSIDE VIEWS

TOP VIEWS

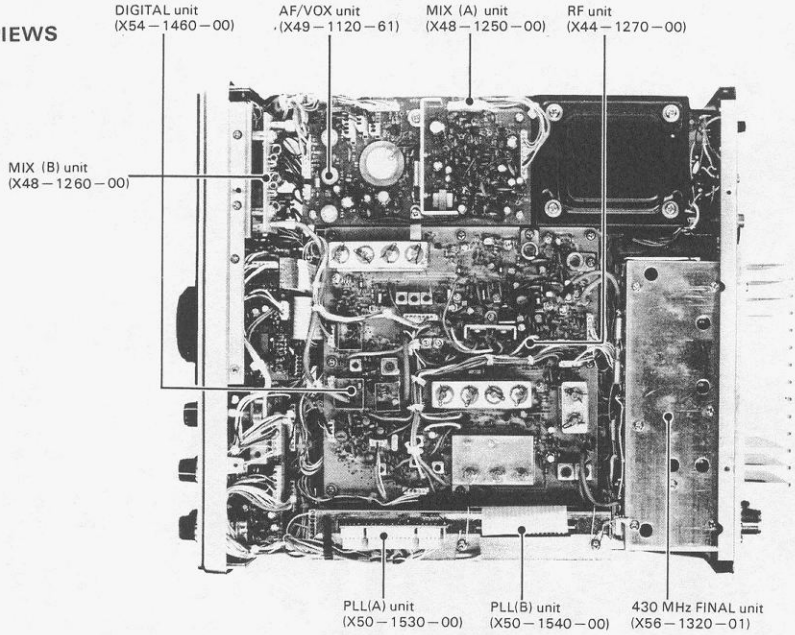

BOTTOM VIEWS

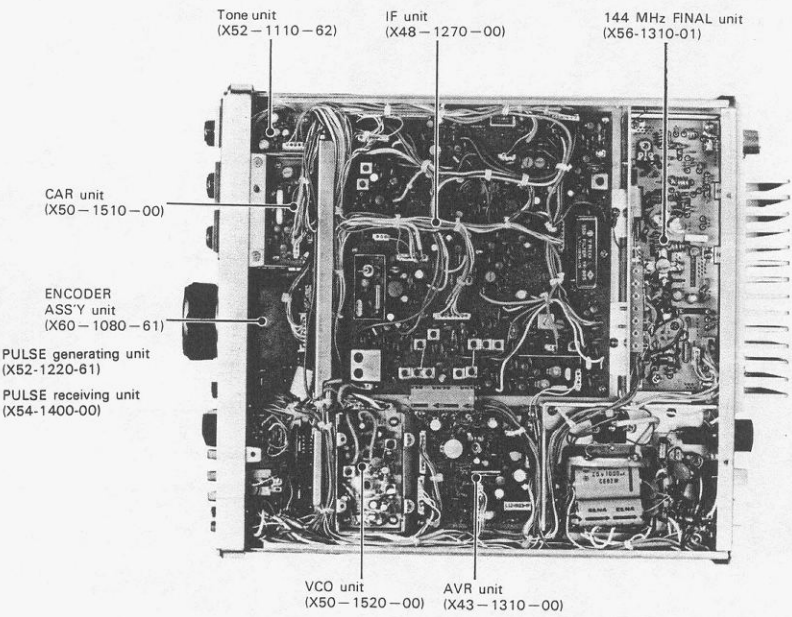

PACKING

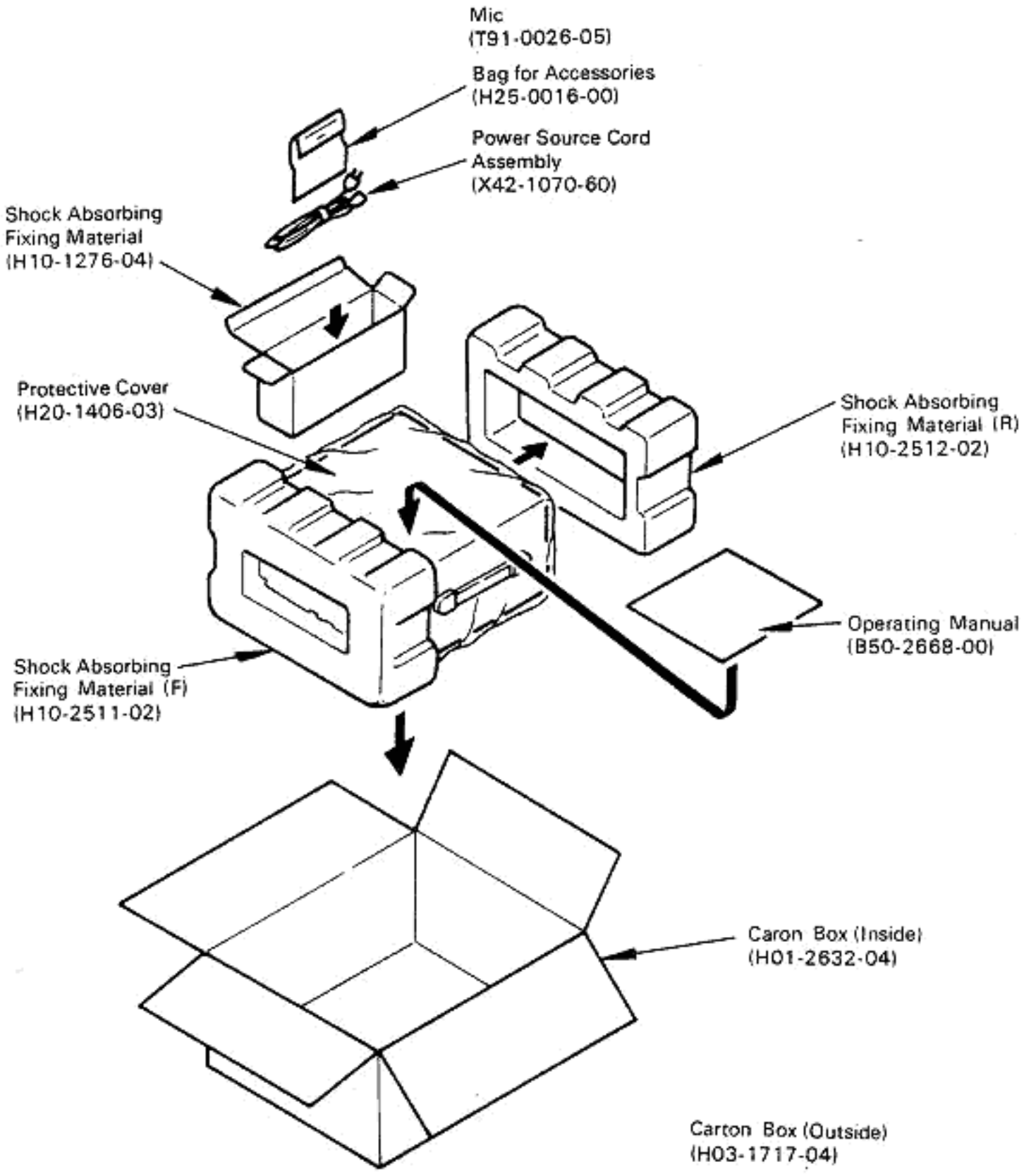

Fig. 23 Packing

Accessories

Name	Parts No.	pcs.
Fuse 2A	F05-2023-05	1
Speaker plug	E12-0001-05	1
Din plug	E07-0751-05	1
Foot	J02-0049-14	2
Screw	N30-4012-41	2

BLOCK DIAGRAM

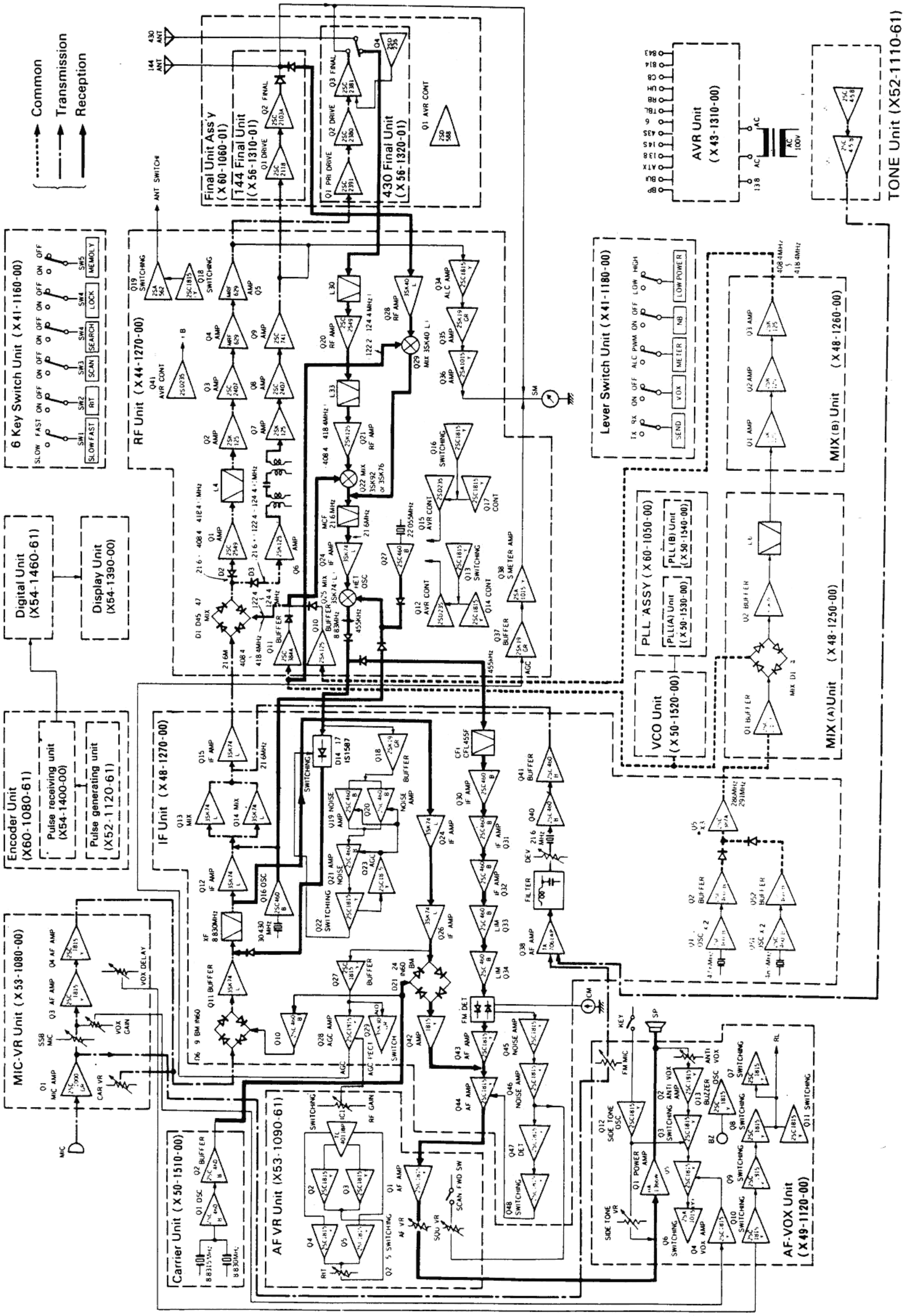

PC BOARD VIEWS

TONE UNIT (X52-1110-62) 35
VCO Unit (X50-1520-00) 35
RF Unit (X44-1270-00) 36
IF Unit (X48-1270-00) 37
PLL(A) Unit (X50-1530-00) 38
PLL(B) Unit (X50-1540-00) 39
6 Key Unit (X41-1160-00) 40
Lever Switch Unit (X41-1180-00) 40
Display Unit (X54-1390-00) 40
AVR Unit (X43-1310-00) 41
AF VR Unit (X53-1090-61) 41
AF VOX Unit (X49-1120-61) 42
MIC VR Unit (X53-1080-00) 42
CAR Unit (X50-1510-00) 43
Pulse Generating Unit (X52-1120-61) 43
Pulse Receiving Unit (X54-1400-00) 43
MIX(A) Unit (X48-1250-00) 44
MIX(B) Unit (X48-1260-00) 44
Printed Circuit (A) (J25-2699-14) 44
Digital Unit (X54-1460-61) 45
144 Final Unit (X56-1310-01) 46
430 Final Unit (X56-1320-01) 46
IF Unit (X48-1220-00) 47
MIX Unit (X48-1230-00) 48

► TONE unit (X52-1110-62)

Q1,2: 2SC458(B)
D1: 1S1555

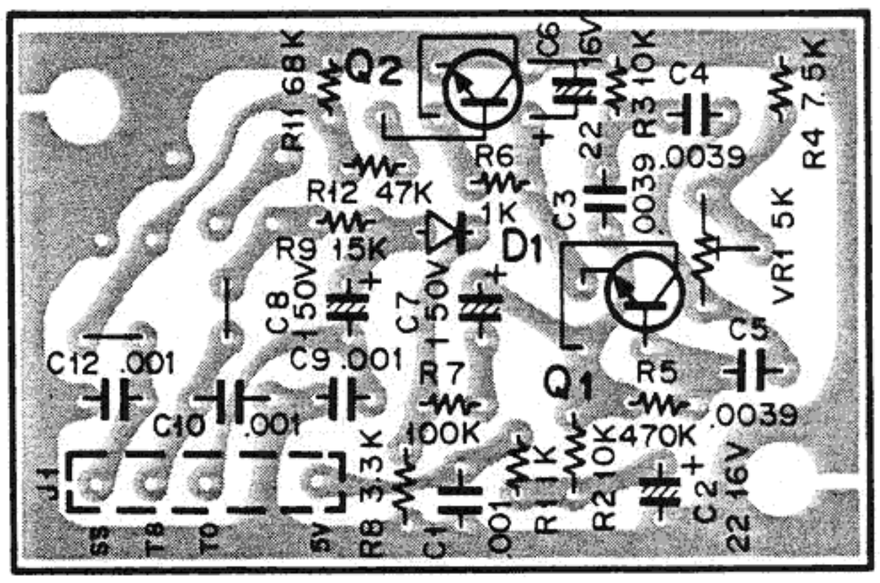

▼ VCO unit (X50-15200-00)

Fix this portion in place with silicone.
(Be careful not put any silicone into the core of the coil.)

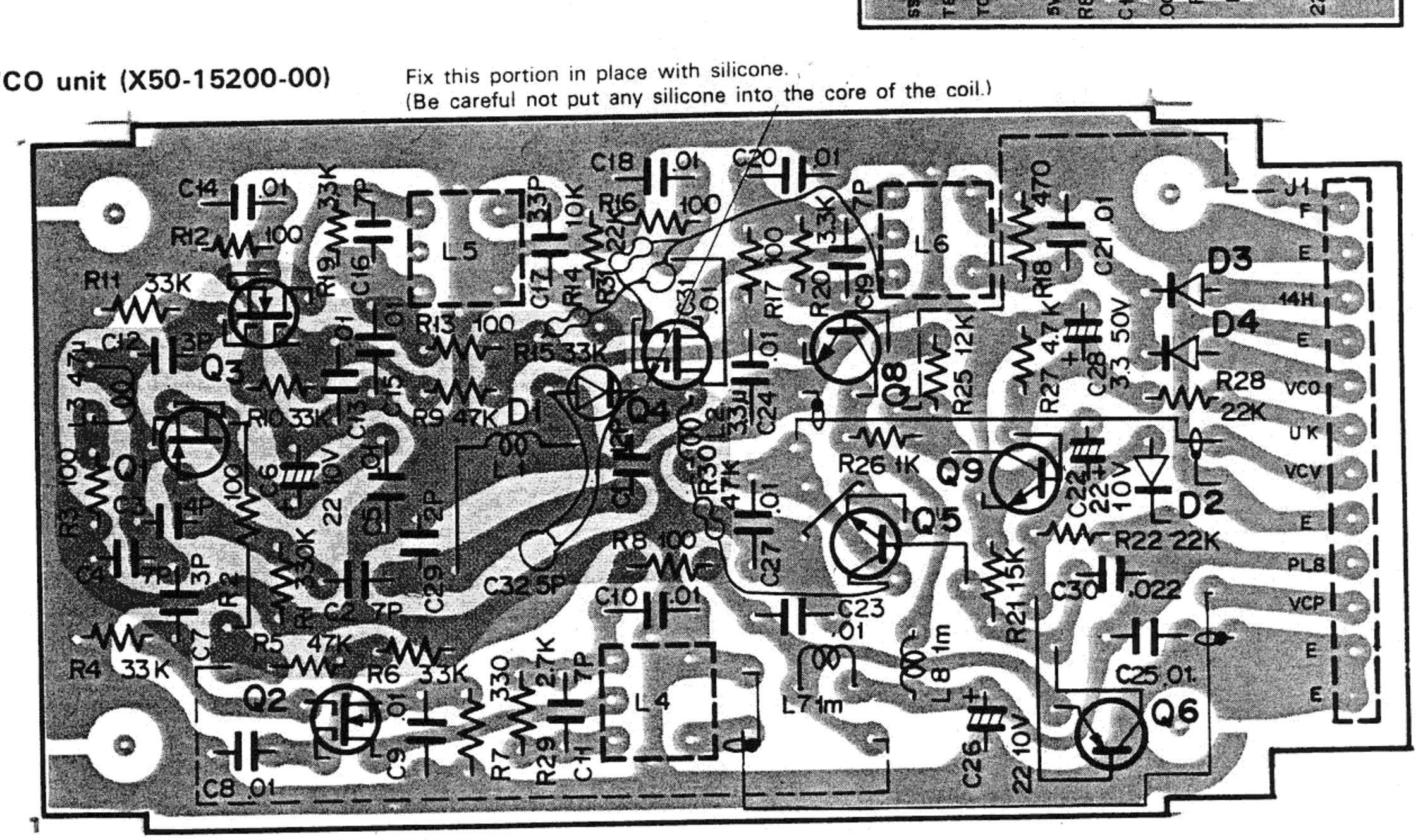

Q1:2SK19(GR) Q2、3:3SK40M Q4:3SK40(L) Q5、9:2SC1815(Y) Q6:2SA1015(Y) Q8:2SC735(Y) D1:1S2208 D2:1N60 D3、4:1S2588

2SA1015(Y)
2SC1815(Y)

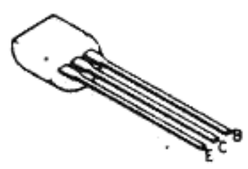

2SC735(Y)

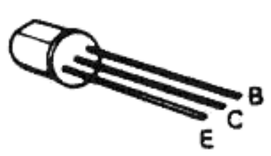

2SK19(GR)

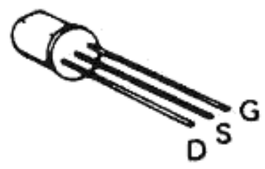

3SK40(L)
3SK40(M)

< Attachment direction of L1 >

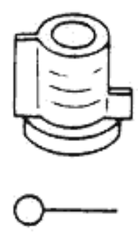

PC BOARD VIEWS

▼ RF unit (X44-1270-00)

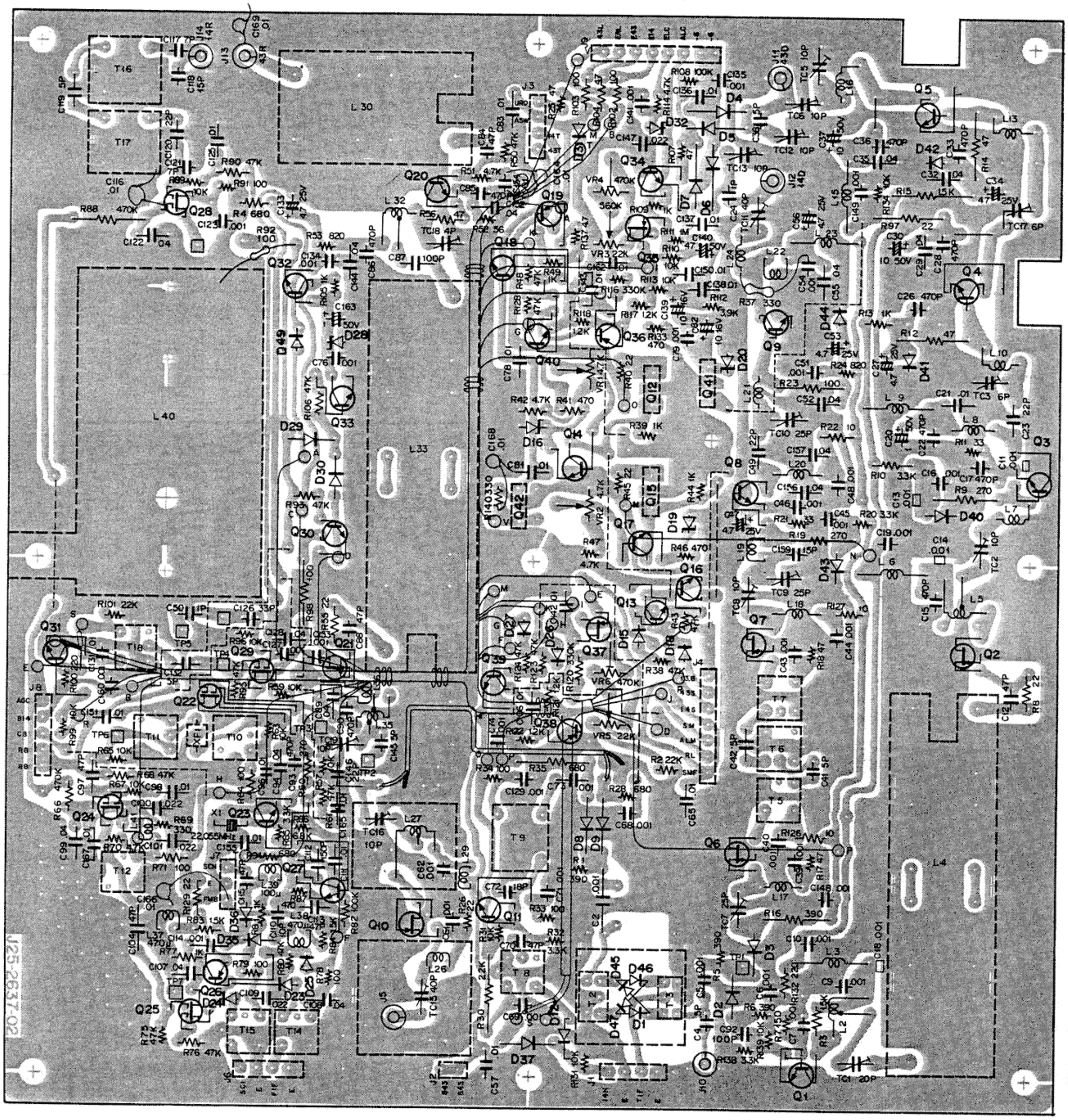

Q4,5:MRF629 Q9:2SC741 Q11:2SC387A Q12,15,41:2SD235(Y)
Q13,14,16～18,23,30,31,33,34,39,40:2SC1815(Y) Q22:3SK92or3SK76 Q24,25:3SK74(L) Q26,36,38:2SA562(Y) Q39:2SA933(Y)
Q27:2SC460(B) Q28,29:3SK40(L) Q32:2SC735(Y) Q35,37:2SK19(GR) Q42:2SC496(Y) D1,45～47:1SS97
D4～7,25:1N60 D12,23,24,35～37:1S1587 D15,18,26,27,29～31,41,42,44,49:1S1555 D16,19,32:XZ-060
D28:XZ117 D40,43:MV-13
U1,20:2SC2549 Q2,6,7,10,21:2SK125 Q3,8:2SC2407

<Attachment direction of diodes>

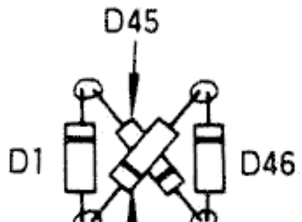

<Attachment method of L4, 30, 33>

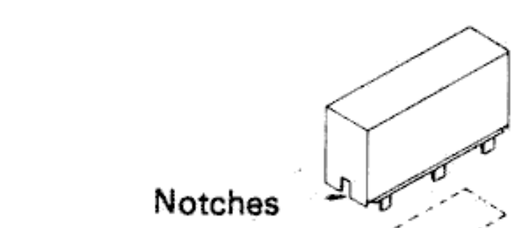

<Attachment method of a through capacitor>

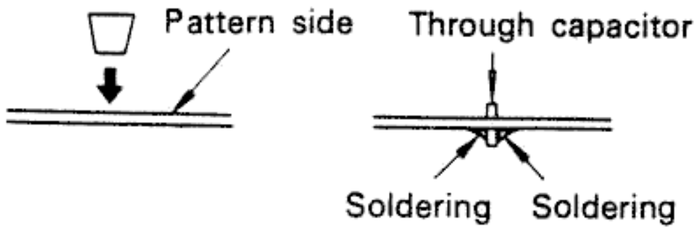

<Attachment direction of T2,3>

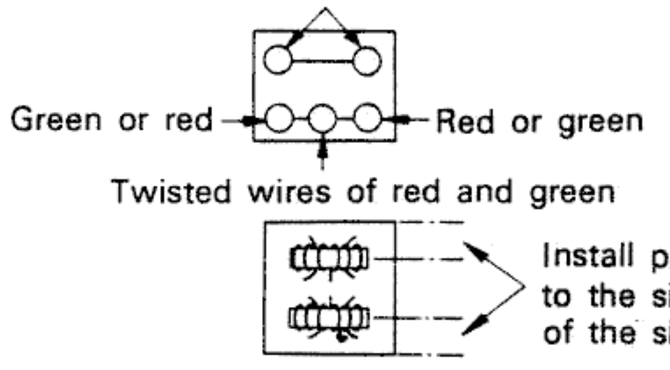

<Attachment method of L40>

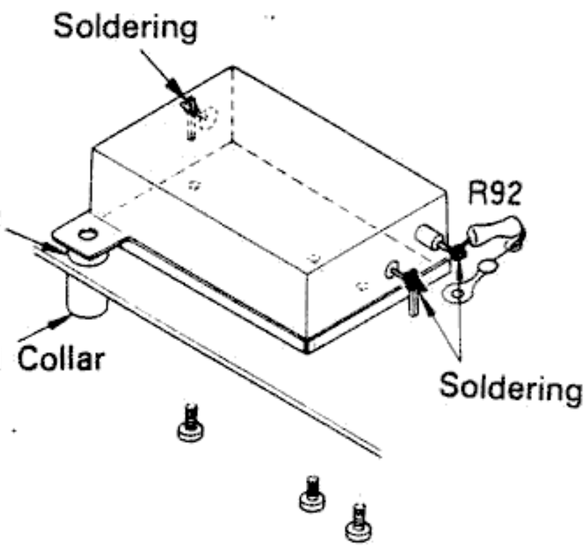

PC BOARD VIEWS

▼ IF unit (X48-1270-00) From S/N 004 .... ~

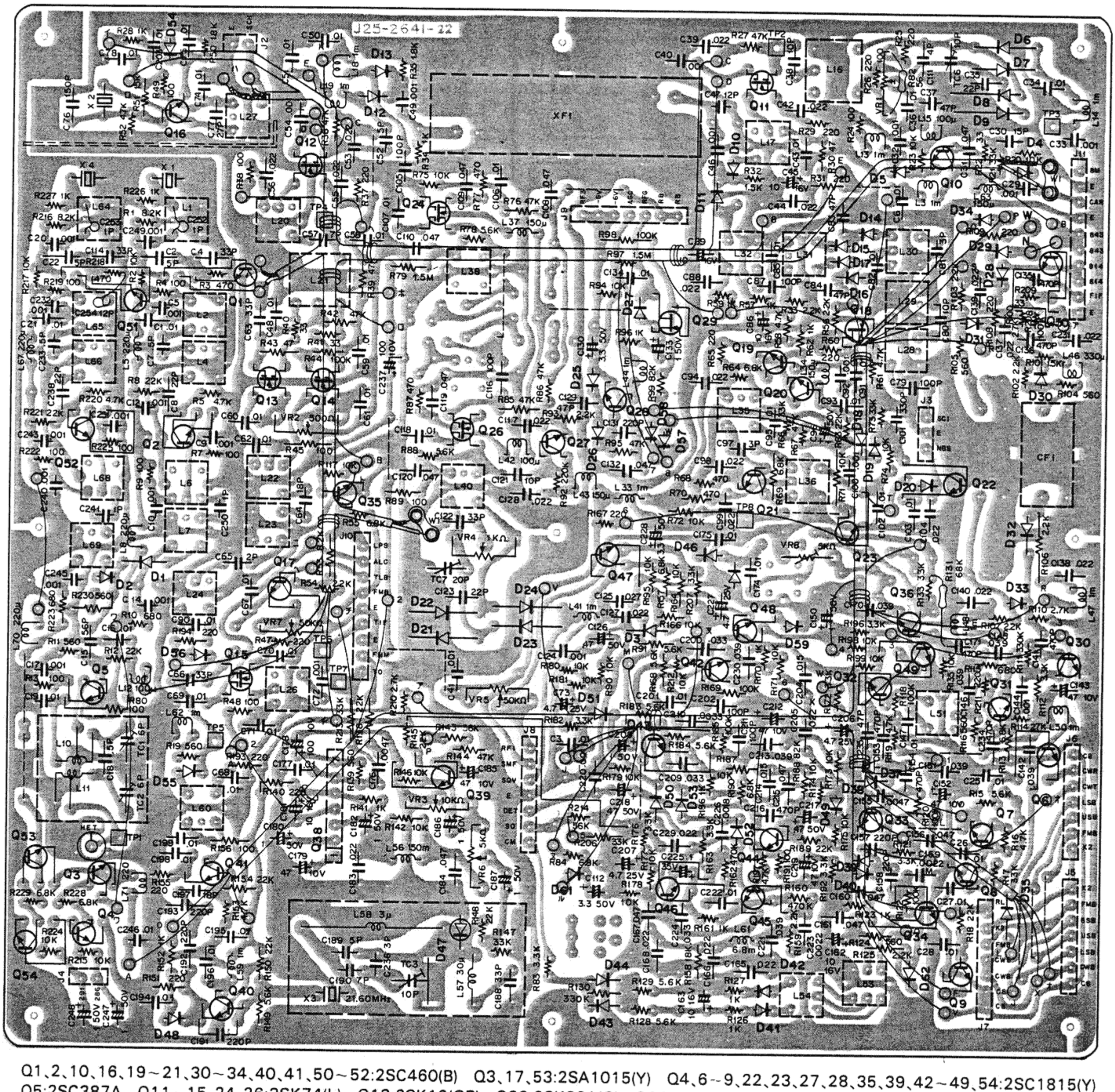

2SA1015(Y)
2SC1815(Y)

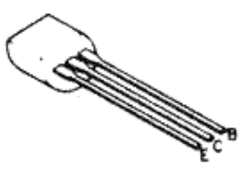

2SC2407
2SC2549

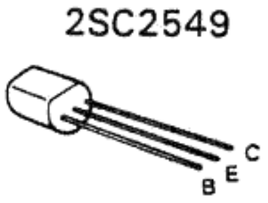

2SA562(Y)
2SC387(A)
2SC735(Y)

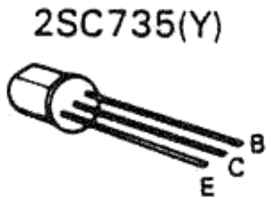

2SC460(B)
2SC1345(E)

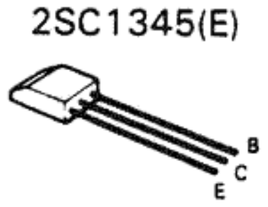

2SC496(Y)

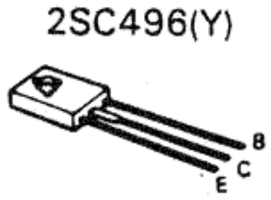

3SK74(L)

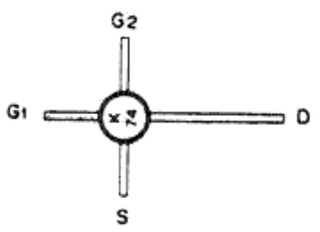

3SK40(L)
3SK76
3SK92

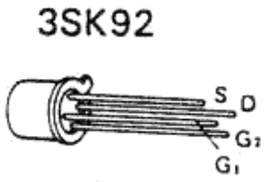

TA7061AP

MRF625

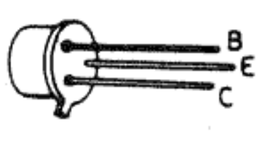

2SC741

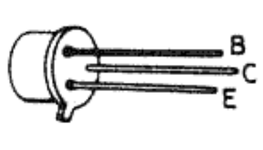

2SK125

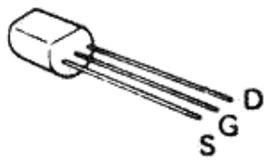

2SK19(GR)

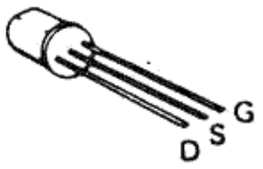

2SD235(Y)

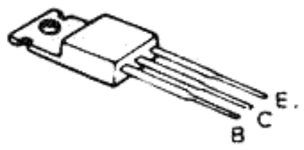

PC BOARD VIEWS

▼ PLL(A) unit (X50-1530-00)

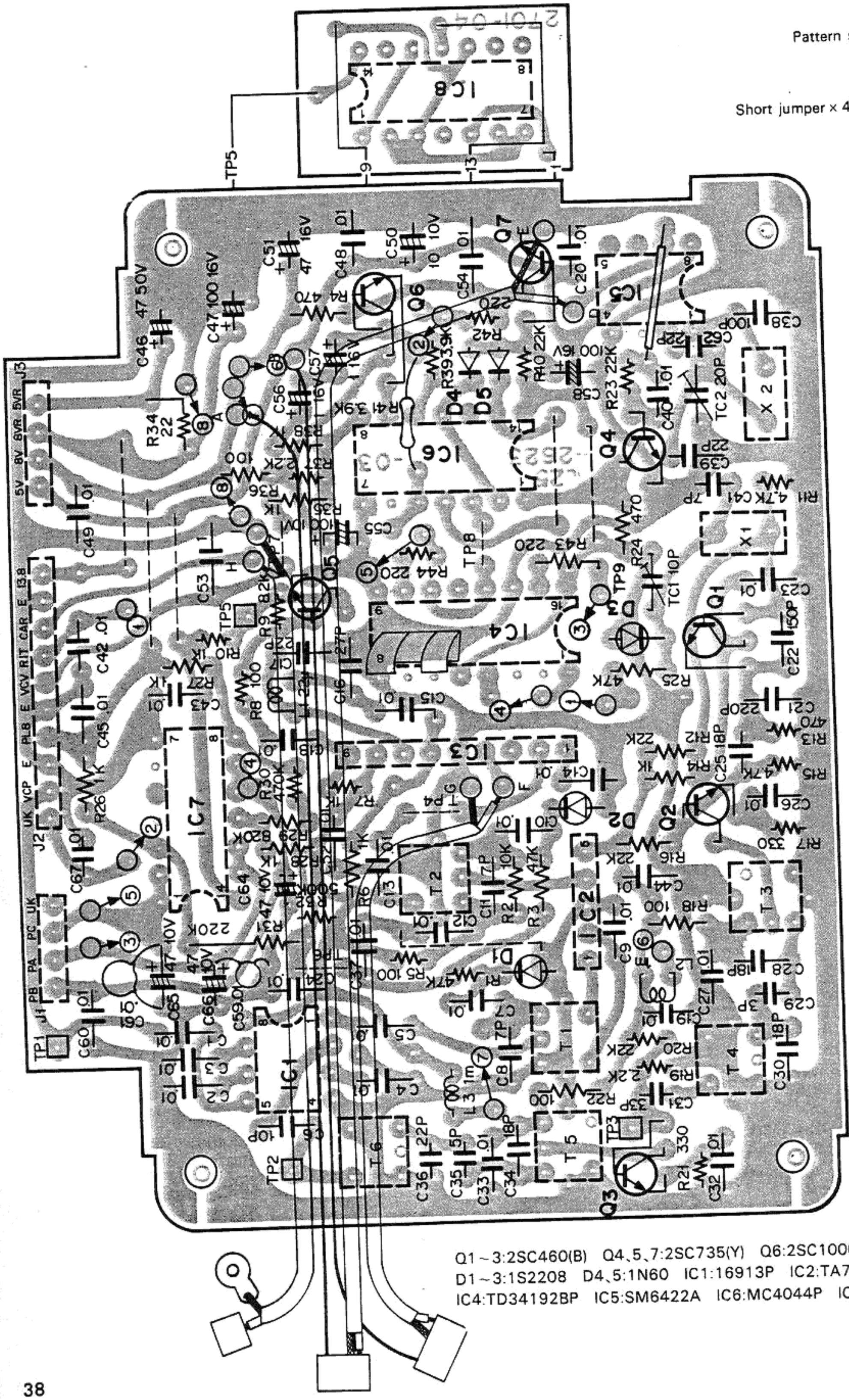

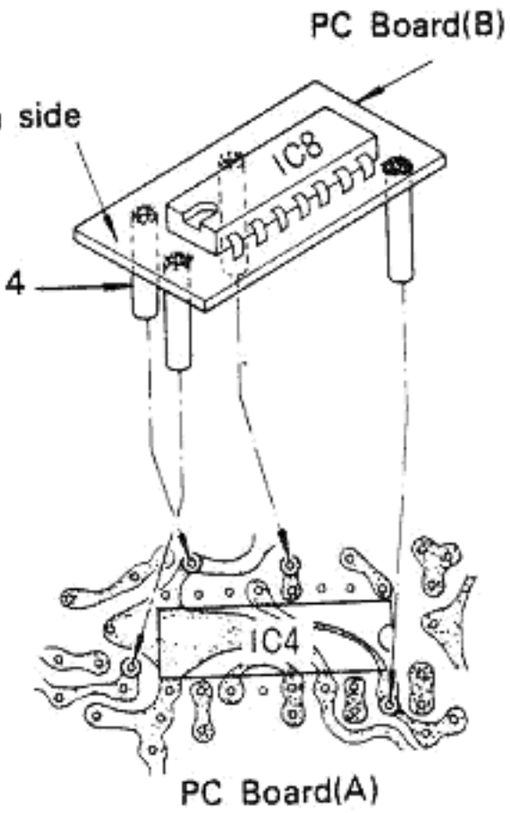

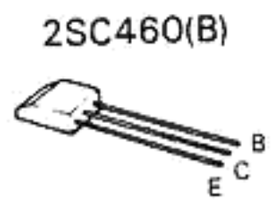

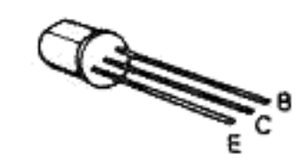

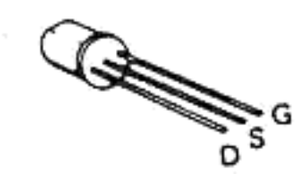

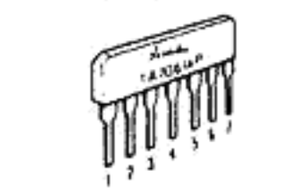

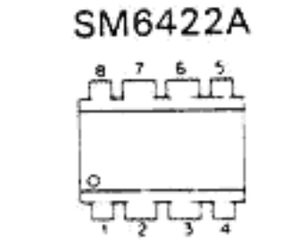

Q1～3:2SC460(B) Q4、5、7:2SC735(Y) Q6:2SC1000(GR)
D1～3:1S2208 D4、5:1N60 IC1:16913P IC2:TA7060P IC3:TA7310P
IC4:TD34192BP IC5:SM6422A IC6:MC4044P IC7:TD3409AP IC8:TD3490BP

PC BOARD VIEWS

▼ PLL(B)unit (X50-1540-00)

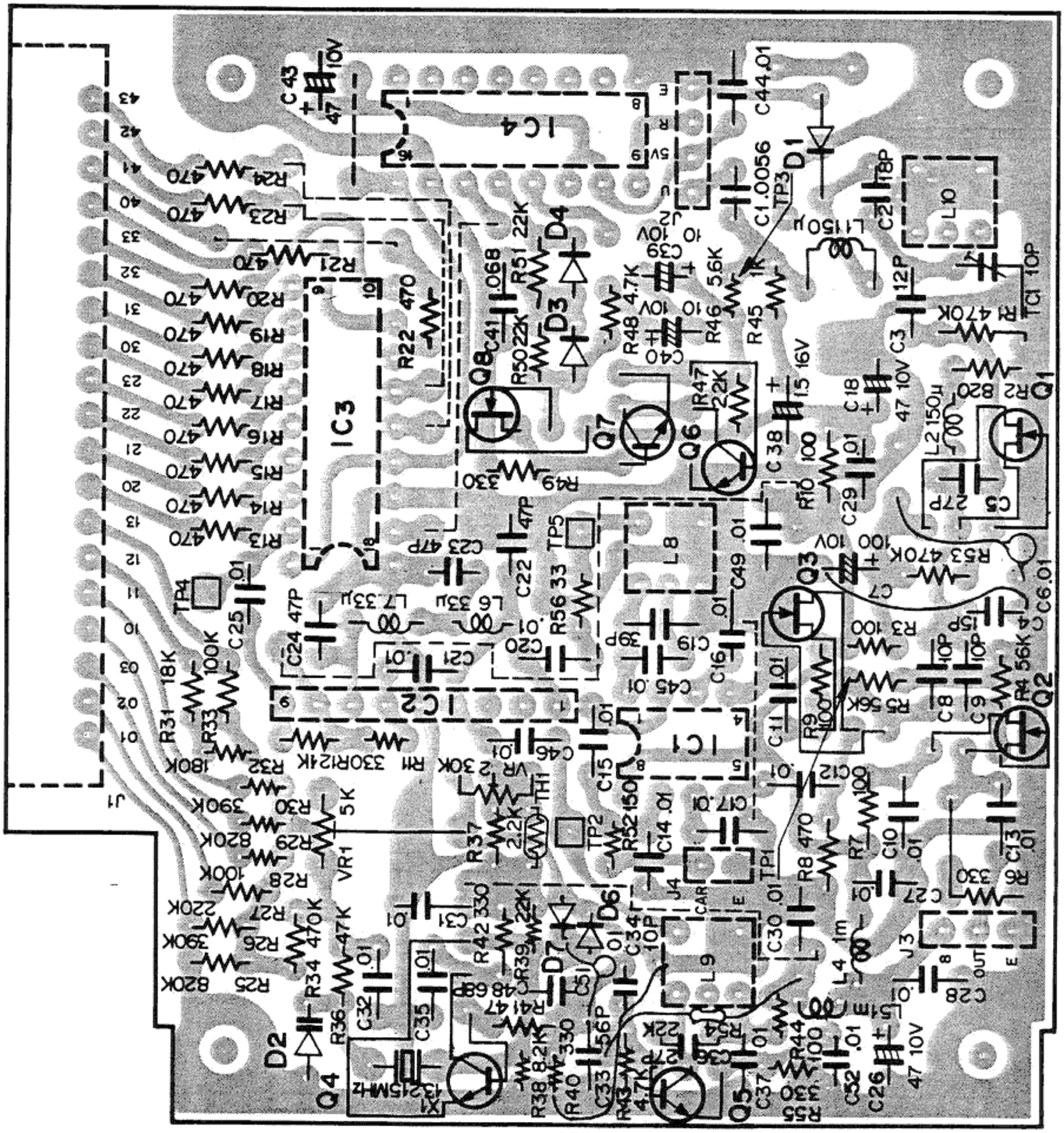

PC BOARD VIEWS

▼ 6 key unt (X41-1160-00)

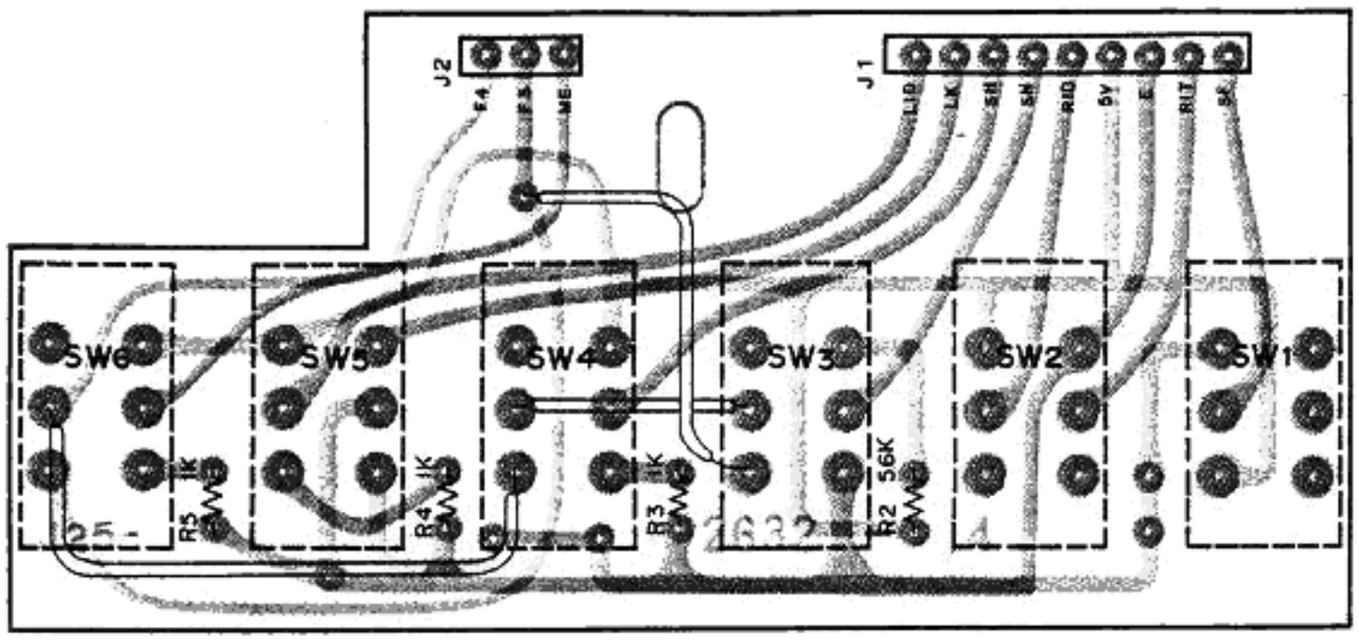

▼ Lever switch unit (X41-1180-00)

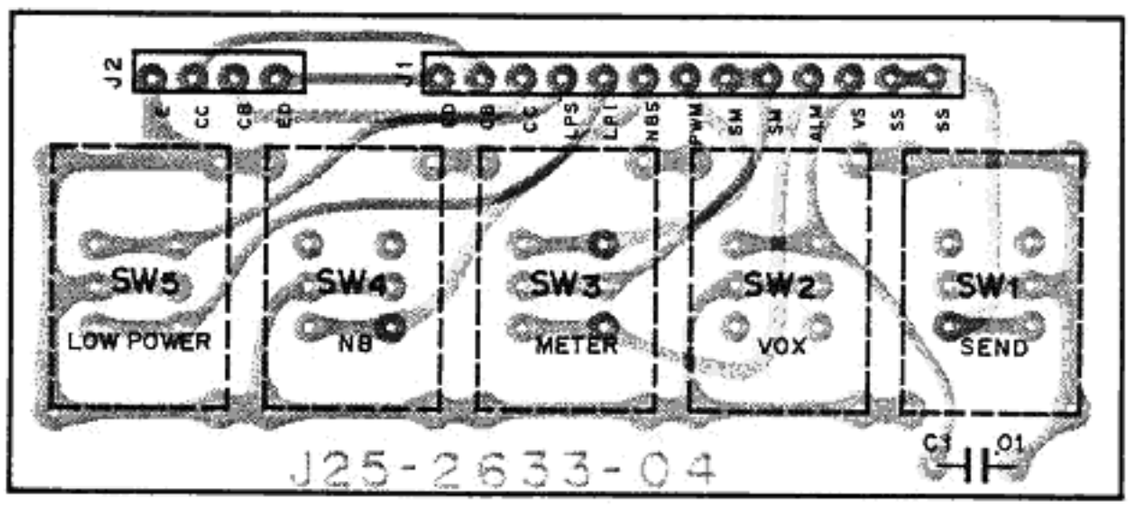

▼ Display unit (X54-1390-00) (View from the parts installed)

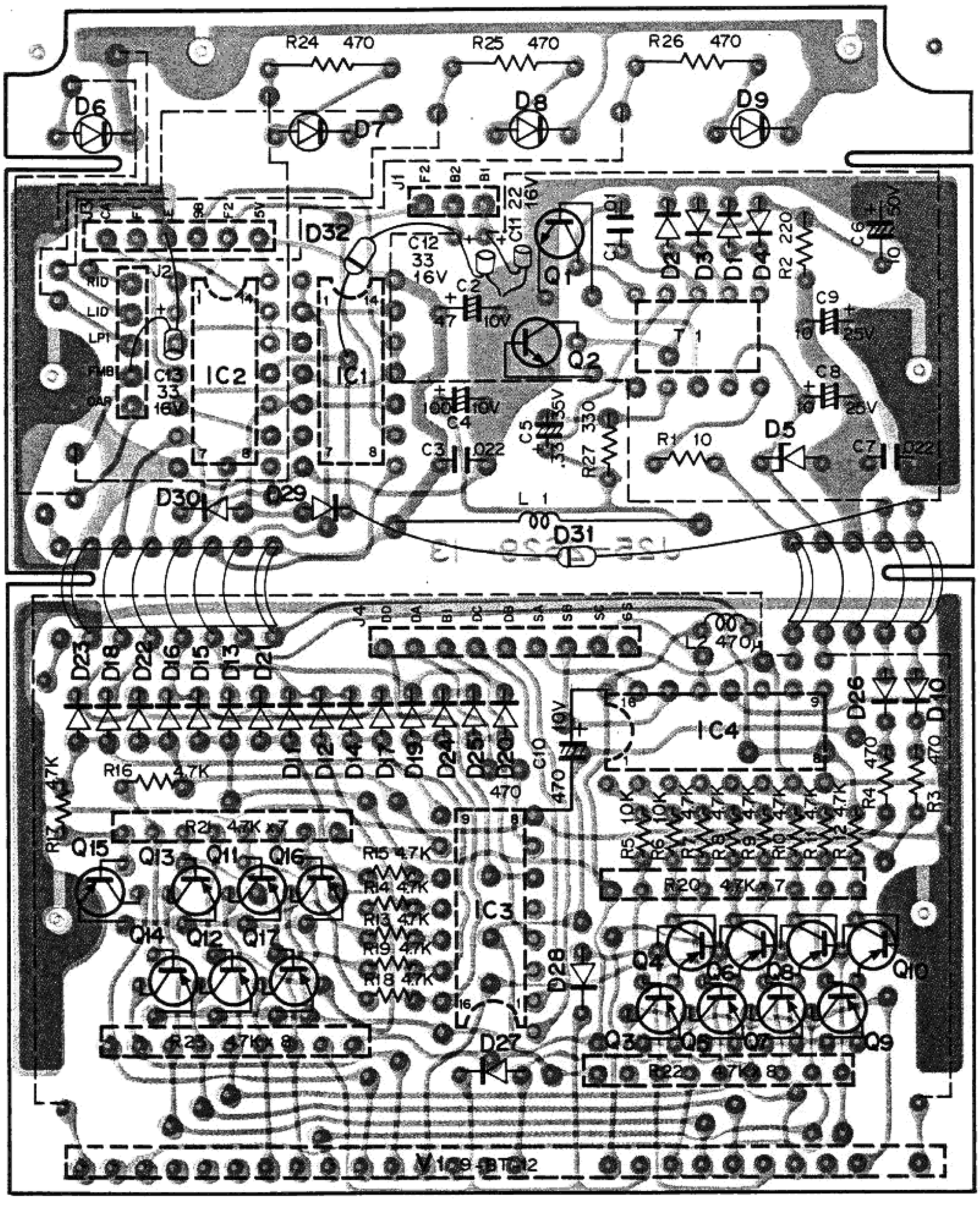

2SA1015(Y)
2SC1815(Y)
2SC1959(Y)

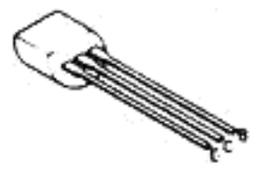

2SC735(Y)

2SC496(Y)

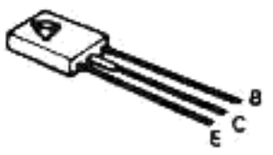

2SC460(B)

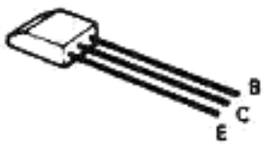

2SA671TD(B)

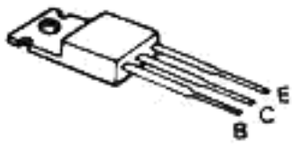

MB3756

TC4011BP
HD74LS00P
HD74LS10P

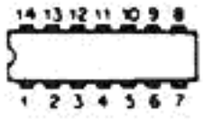

HD74LS42P
SN74LS247N

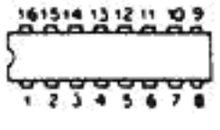

Q1、2:2SC1959(Y) Q3～17:2SC1815(Y) D1～4、10～32:1S1555 D5:WZ-071 D6～9:SEL103W
IC1:HD74LS10P IC2:HD74LS00P IC3:SN74LS247N IC4:HD74LS42P

PC BOARD VIEWS

▼ AVR unit (X43-1310-00)

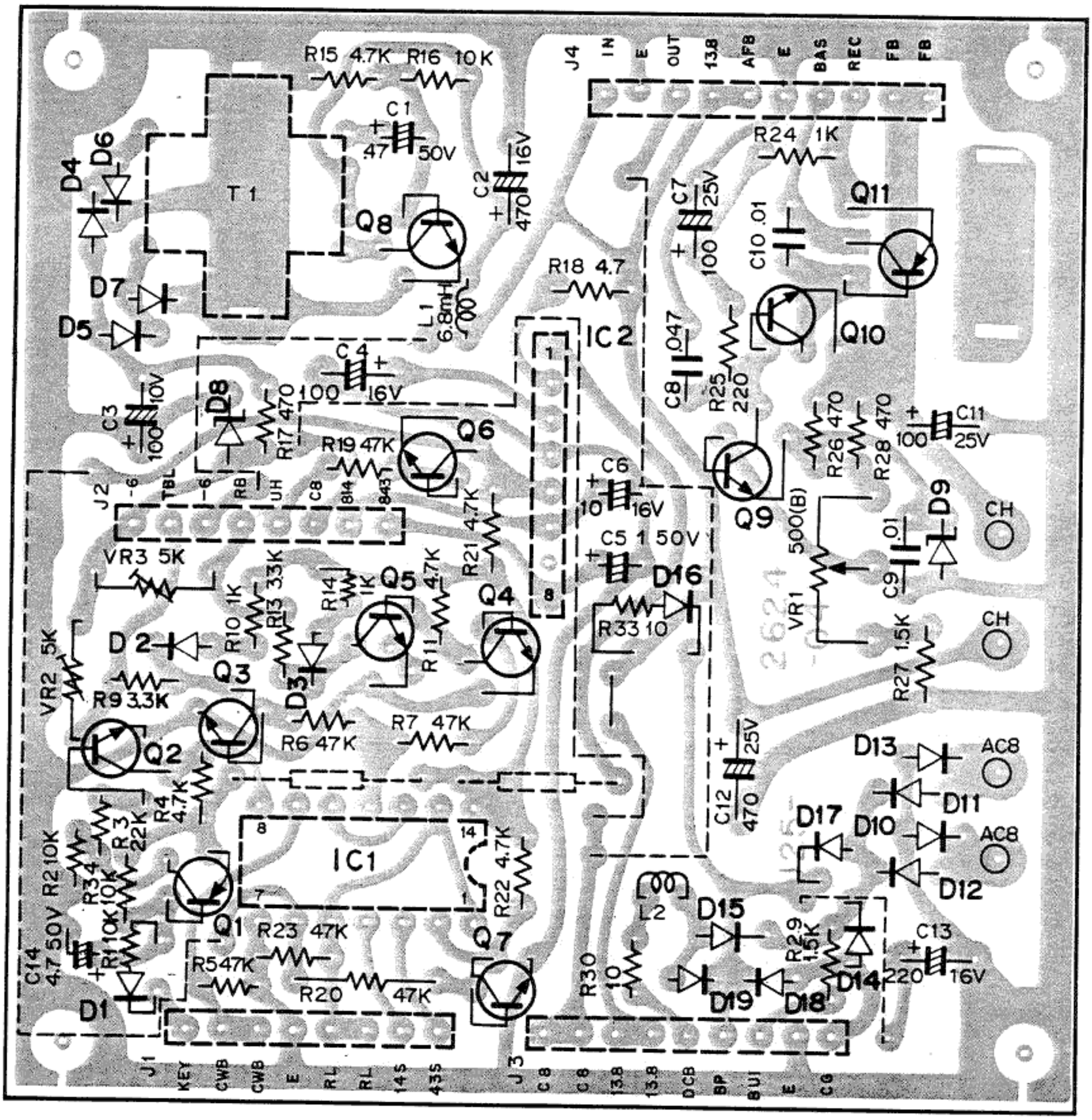

Q1:2SA1015(Y) Q2~7,9:2SC1815(Y) Q8:2SC735(Y) Q10:2SC496(Y) Q11:2SA671TD(B) D1,4~7:1S1555
D2:MV-13 D3:1N60 D8:XZ-060 D9:WZ-090 D10~19:1N4448 IC1:TC4011BP IC2:MB3756M

▼ AF·VR unit (X53-1090-61)

Q1~6:2SC1815(Y) D1:1S1555 IC1:TC4011BP

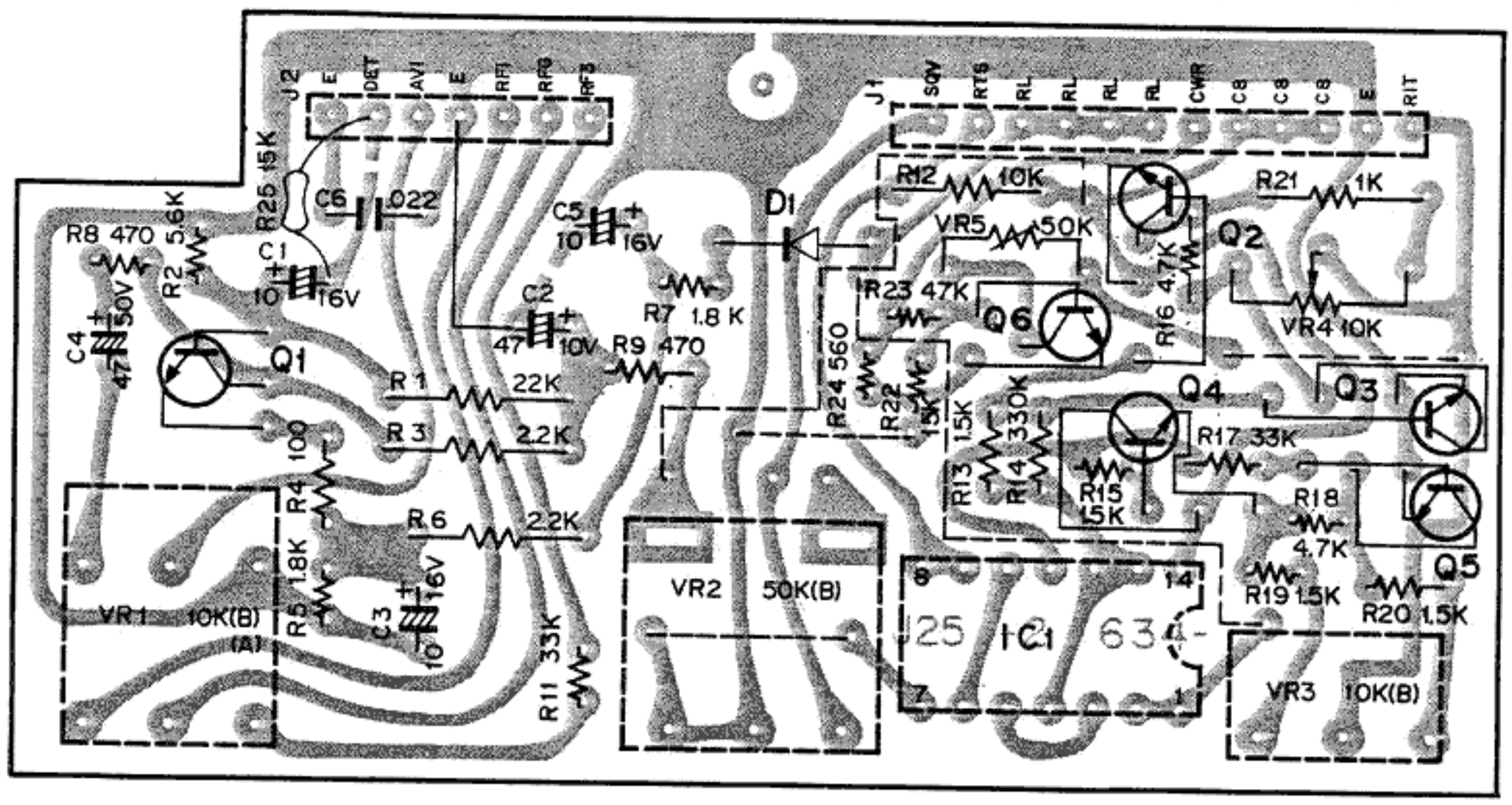

PC BOARD VIEWS

▼ AF·VOX unit (X49-1120-61)

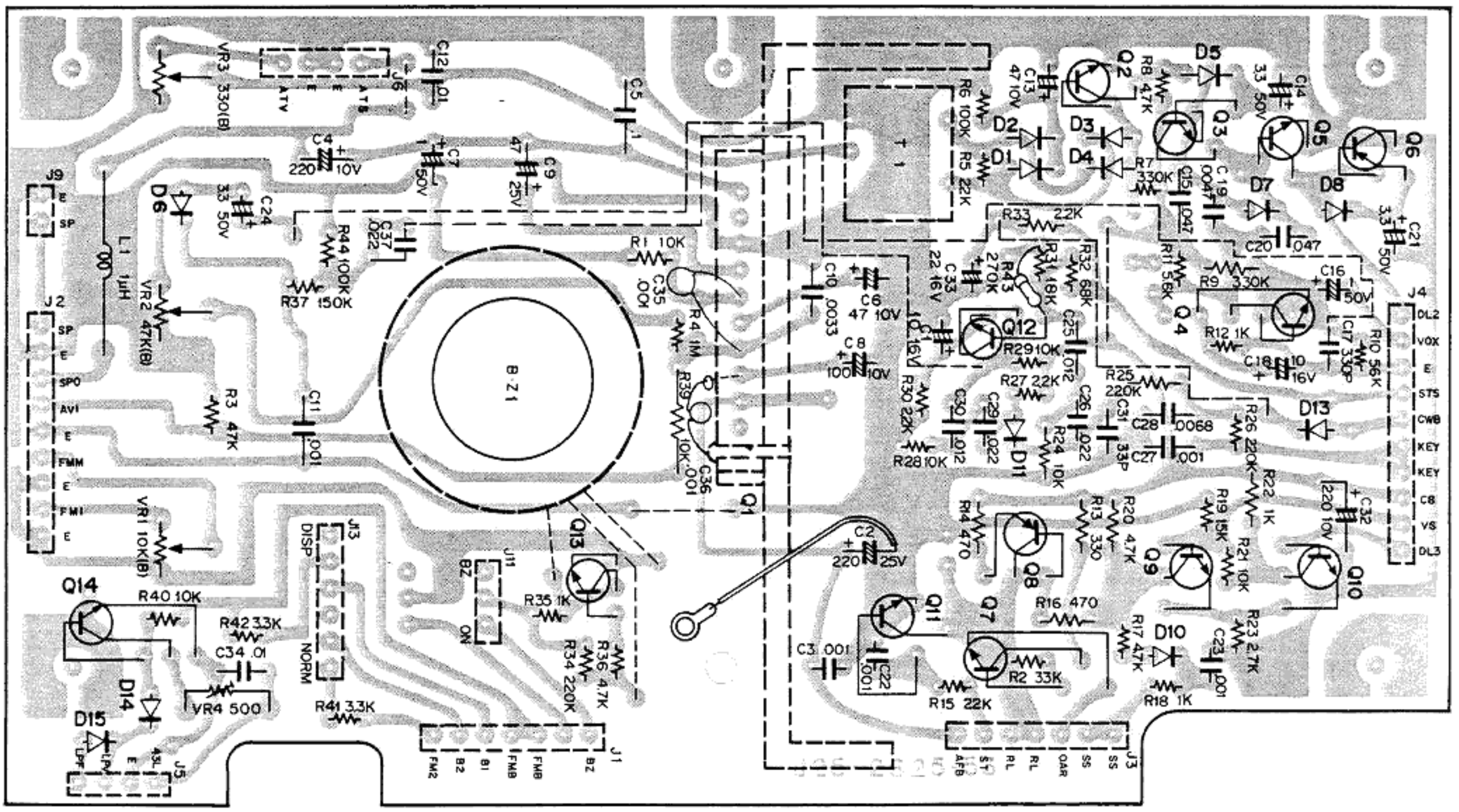

Q1:HA1366W Q2~5,7,9~14:2SC1815(Y) Q6,8:2SA1015(Y) D1~4,7,13:1N60 D5,8,10,11,14,15:1S1555 D6:1S2588

<Attachment method of the C36>

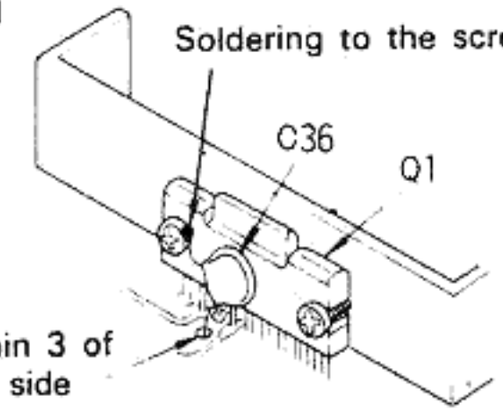

<Attachment method of the buzzer and Q1>

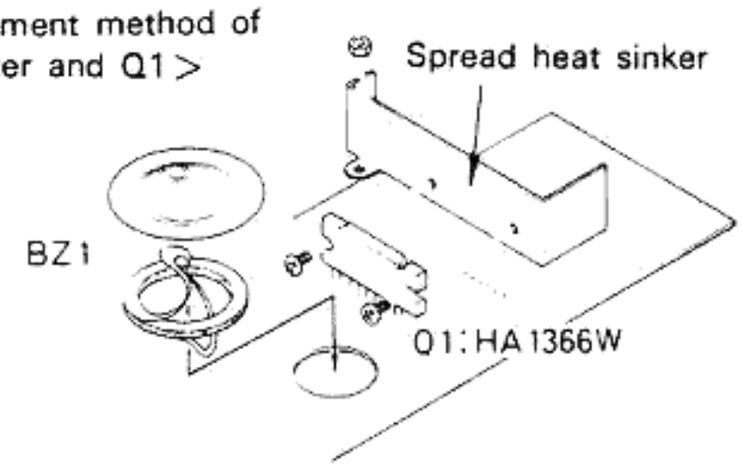

▼ MIC·VR unit (X53-1080-00)

Q1:2SC1000(GR) Q2~7:2SC1815(Y)

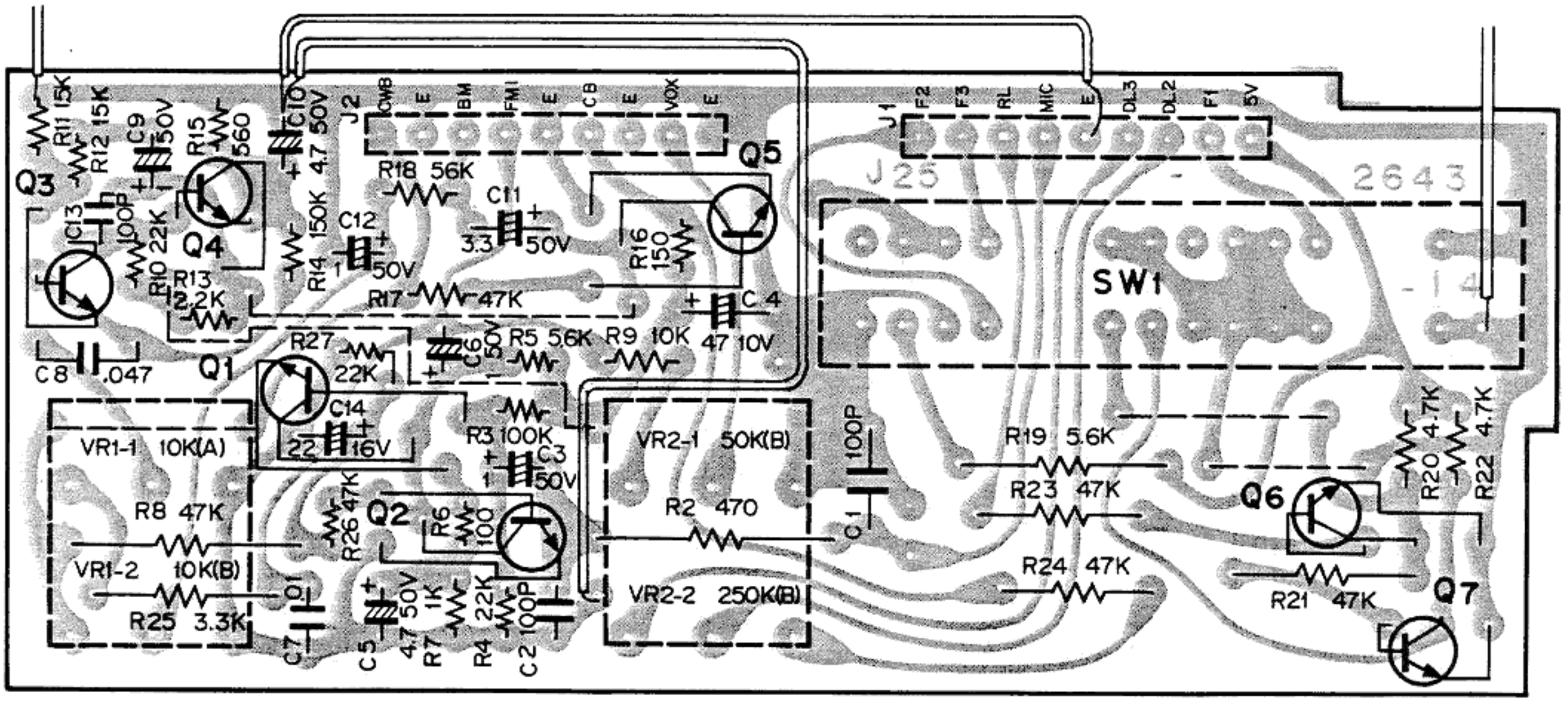

PC BOARD VIEWS

▼ CAR unit (X50-1510-00)

Q1,2: 2SC460(B) D2～6: 1S1555

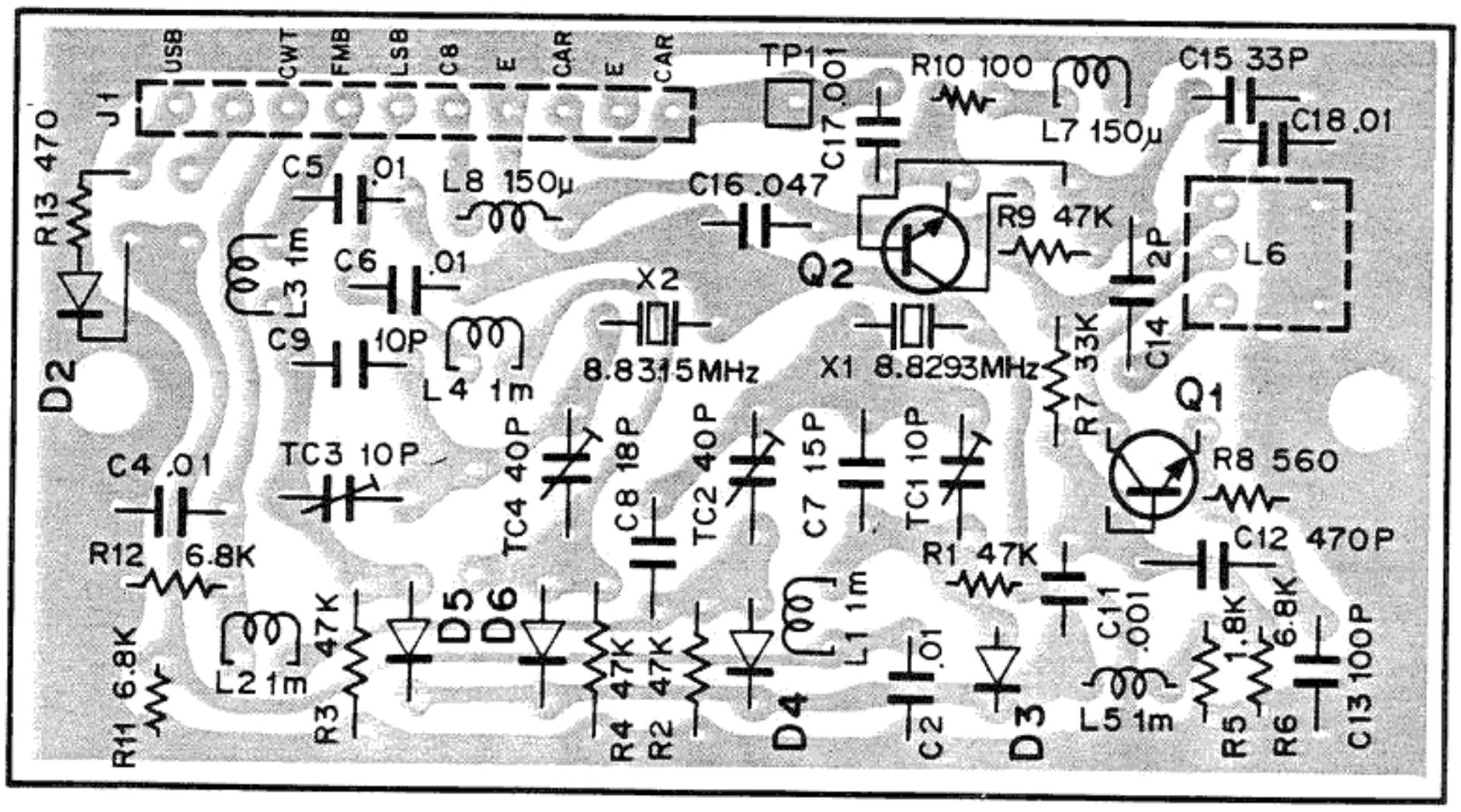

<Ploarity of Q1～3>

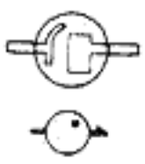

<Attachment method of Q1～3>

Make it come into close contact with the PC board.

<Differences between Q1 and Q2, 3>

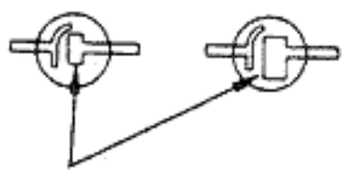

This portion of Q1 is bigger than Q2.3.

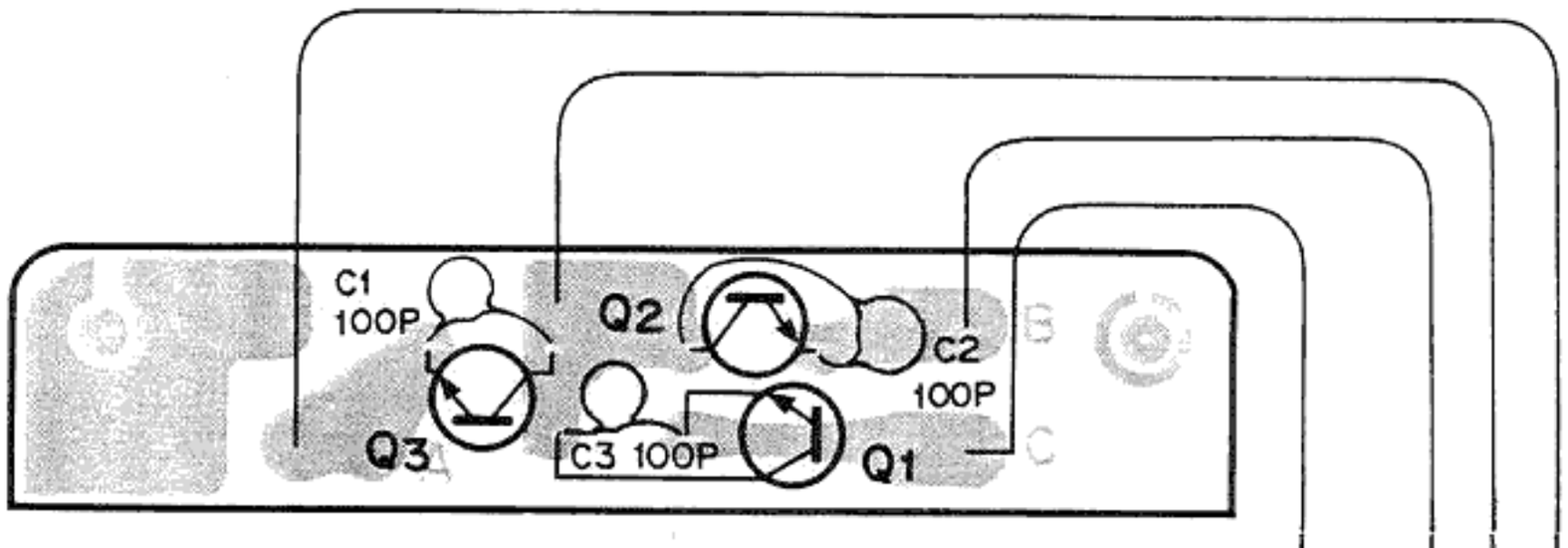

▲ Pulse receiving unit (X54-1400-00)

▼ Pulse generating unit (X52-1120-61)

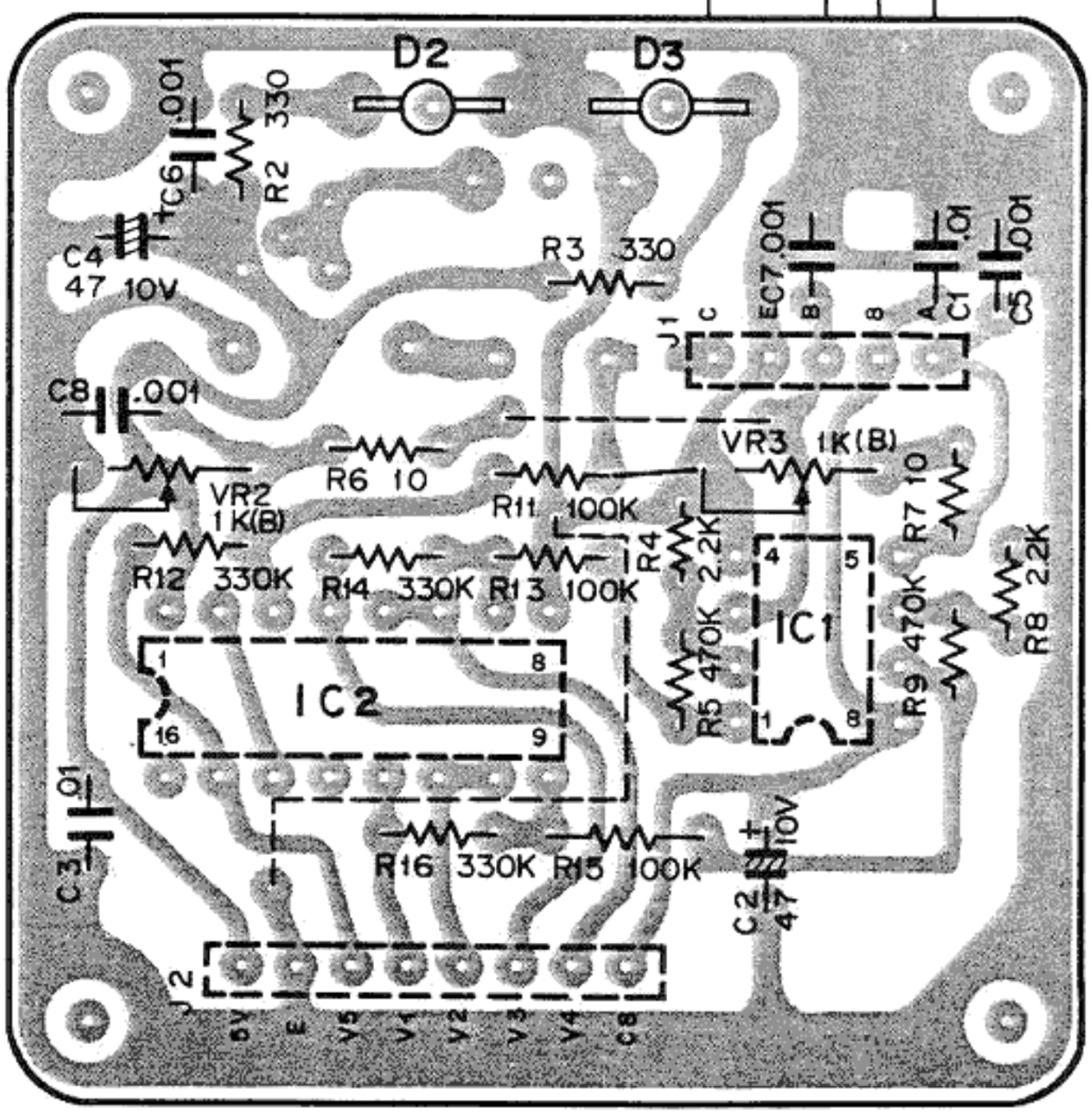

<Polarity of D1～3>

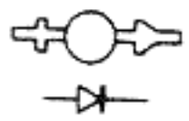

2SA1015(Y)
2SC1815(Y)

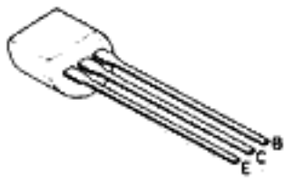

2SC496

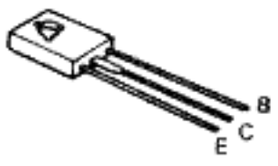

2SC1000(GR)

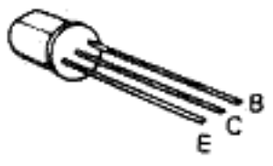

LM358P

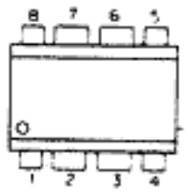

HA1366W

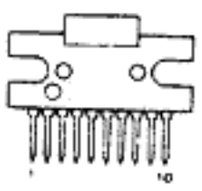

TC4011BP

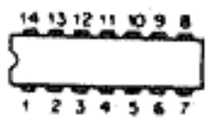

MC14049UBCP

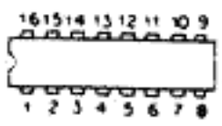

D1～3:SEL101R(BorC) IC1:LM358P IC2:MC14049UBCP

PC BOARD VIEWS

▼ MIX(A) unit (X48-1250-00)

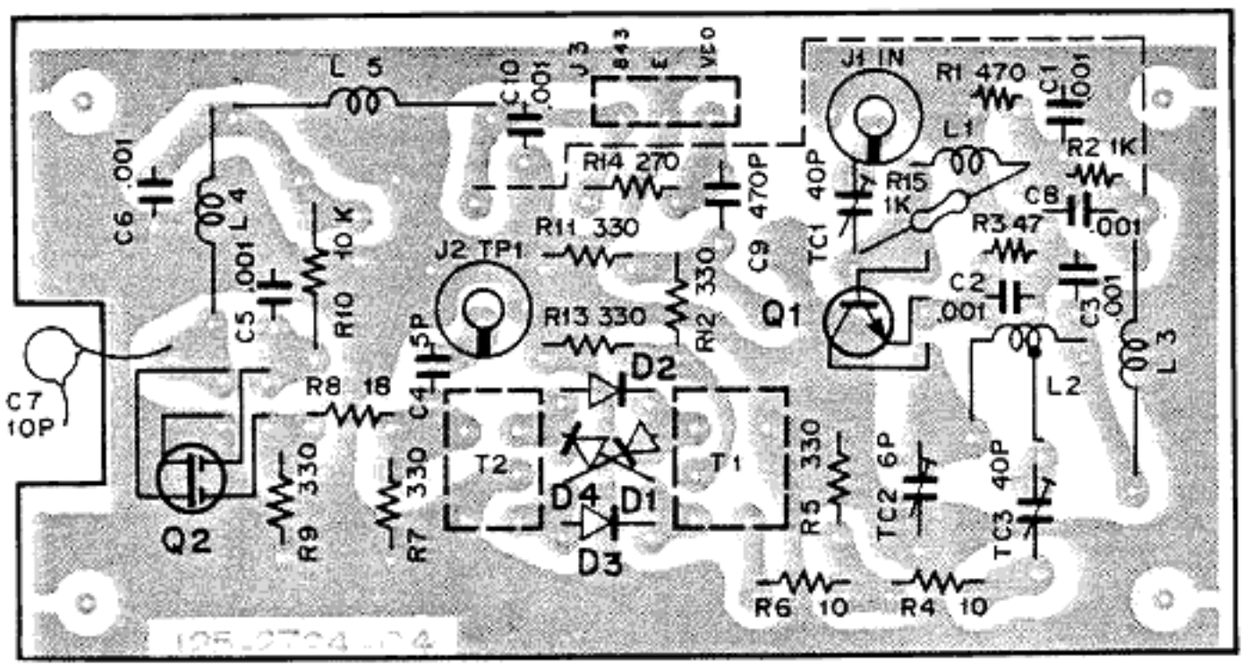

Q1:2SC2407 Q2:3SK76or3SK92 D1~4:1SS97

<Attachment direction of T1,2>

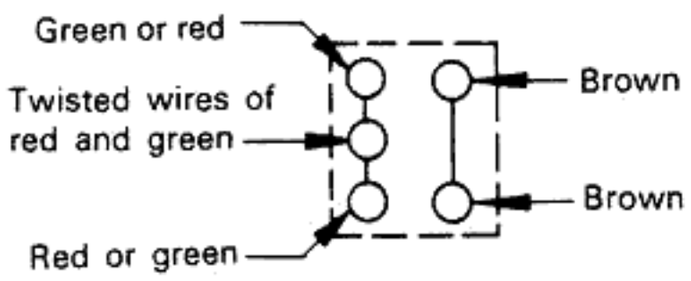

<Attachment direction of D1,4>

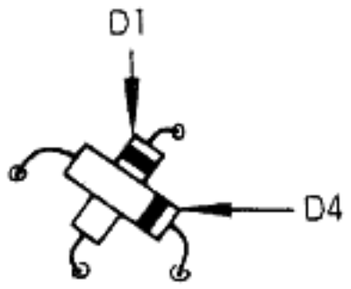

▼ MIX(B) unit (X48-1260-00)

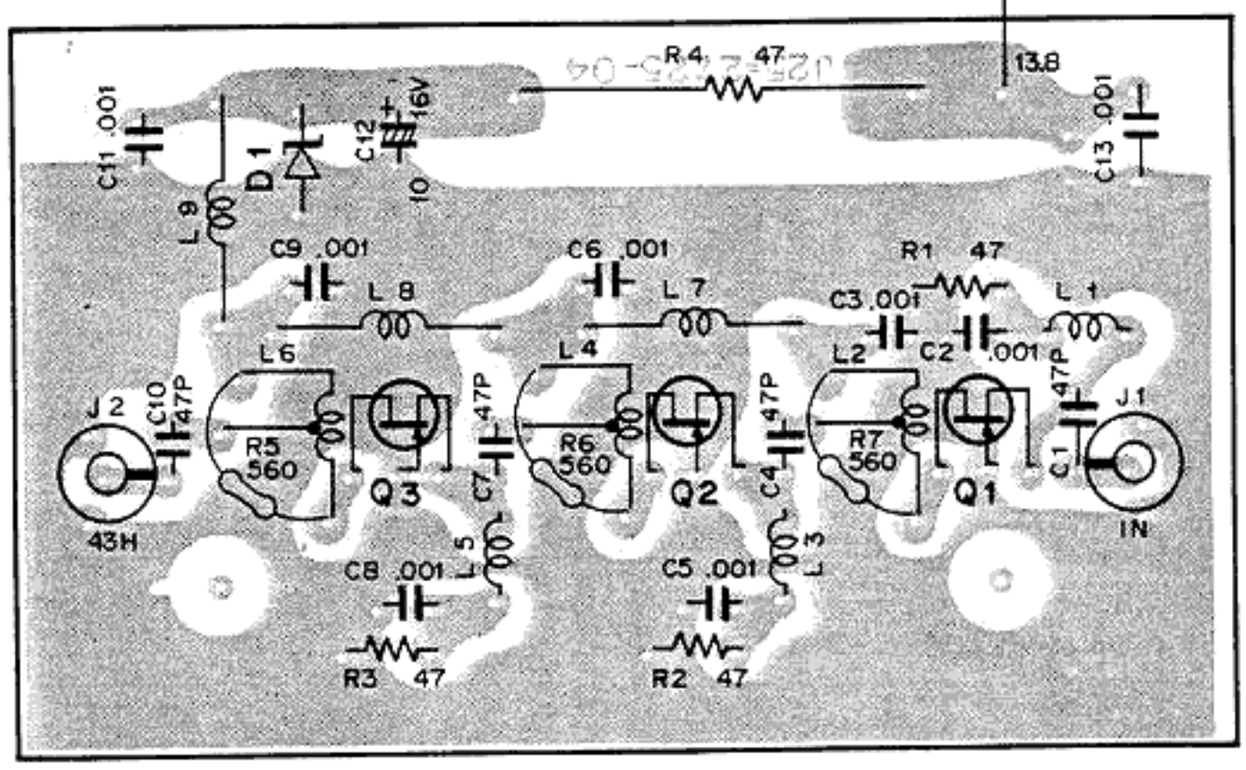

Q1~3:2SK125 D1:BZ-090

▼ PC Board(A) (J25-2699-14)

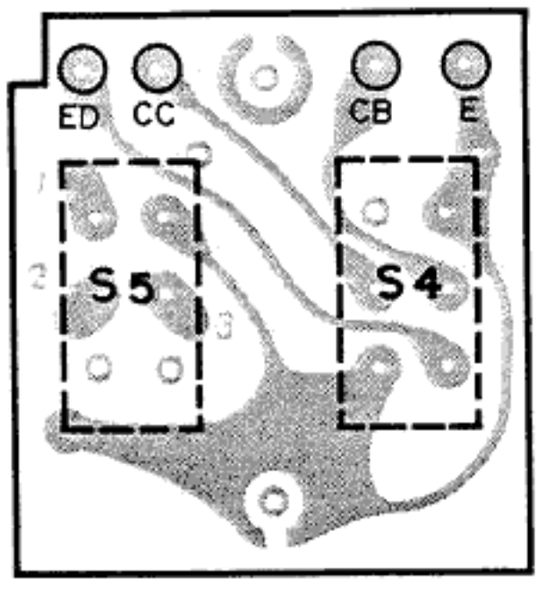

<Attachment direction of the composite resisters.>

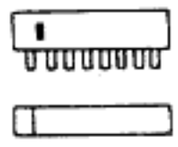

<Attachment method of the J2,3,8>

Adhesives

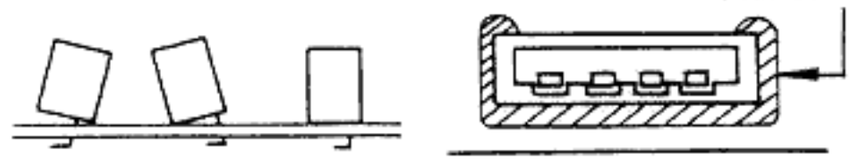

In case of J2, 3, 8, after inserting them into the printed circuit plate, bend the pins at the back side and make them come into close contact with the printed circuit plate.

Furthermore, after dipping, apply sufficient amount of adhesives (Rubber type adhesives such as "Sony Bond" or "Cemedine Hi-Contact") around the connector portion, and fix it in place.

HD74LS00P HD74LS11P
HD74LS03P HD74LS20P
HD74LS04P HD74LS30P
HD74LS08P HD74LS32P
HD74LS10P HD74LS132P
HD7404P
HD74LS75P HD74221P
HD74LS151P MN1201A
HD74LS157P MSM5507RS

2SA1015(Y)
2SC1815(Y)

2SK125

3SK76
3SK92

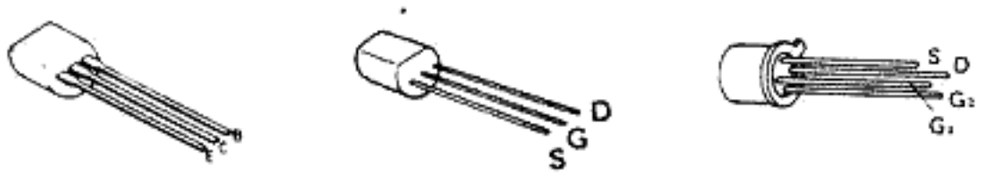

2SC2407

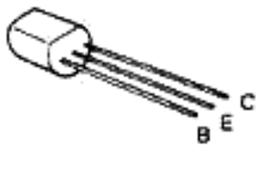

μPC78L05A

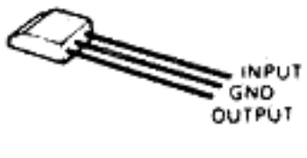

HD74154P

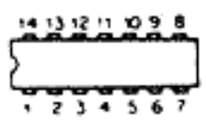

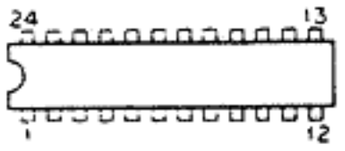

MN9004

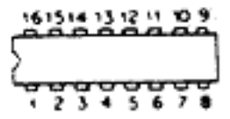

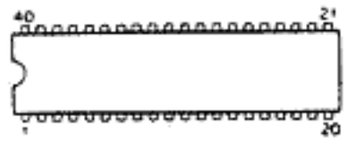

Q1,3~5:2SA1015(Y) Q2,6,7:2SC1815(Y) D1~3,5,7,8,11~15,17~24:1S1555 D4,6,25,26:1N60 IC1,2:HD74LS03P IC3,6,9,11,36:HD74LS00P IC4,19:HD74LS08P IC5:HD74LS10P IC7,12:HD74LS04P IC8:HD74LS132P IC10:HD74LS32P IC14:HD74LS02P IC15,16,21:HD74LS20P IC17:HD7404P IC18:MSM5507RS IC20:HD74LS11P IC22~24:HD74LS30P IC25:HD74154P IC26~29:HD74LS151P IC30,31:HD74LS75P IC32,33:MN1201A IC34,35:HD74LS157P IC37:HD74221P IC38:MN9004 IC39:μPC78L05A

PC BOARD VIEWS

▼ Digital Unit (X54-1460-61) (View from the parts installed)

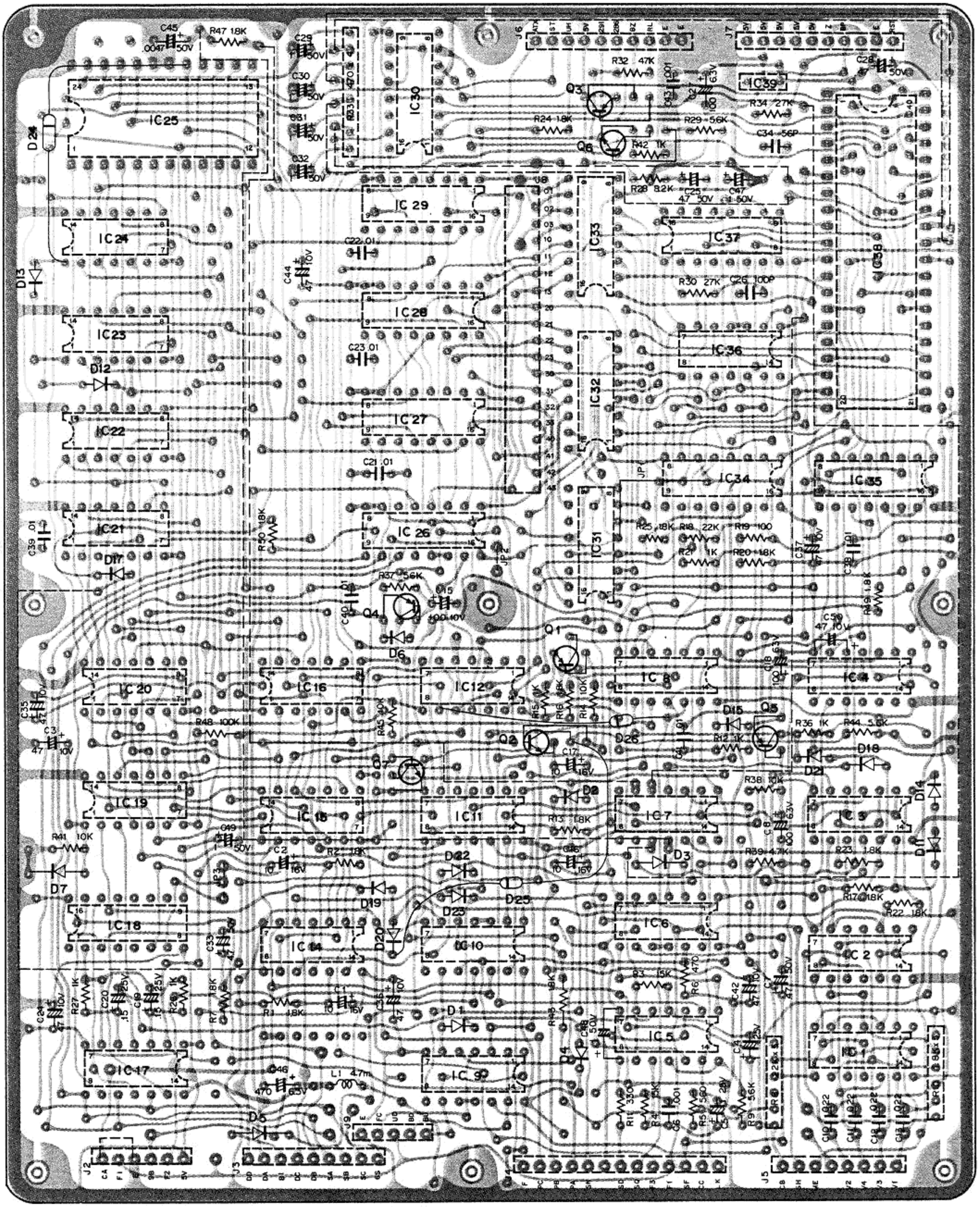

PC BOARD VIEWS

▼ 144 Final Unit (X56-1310-01)

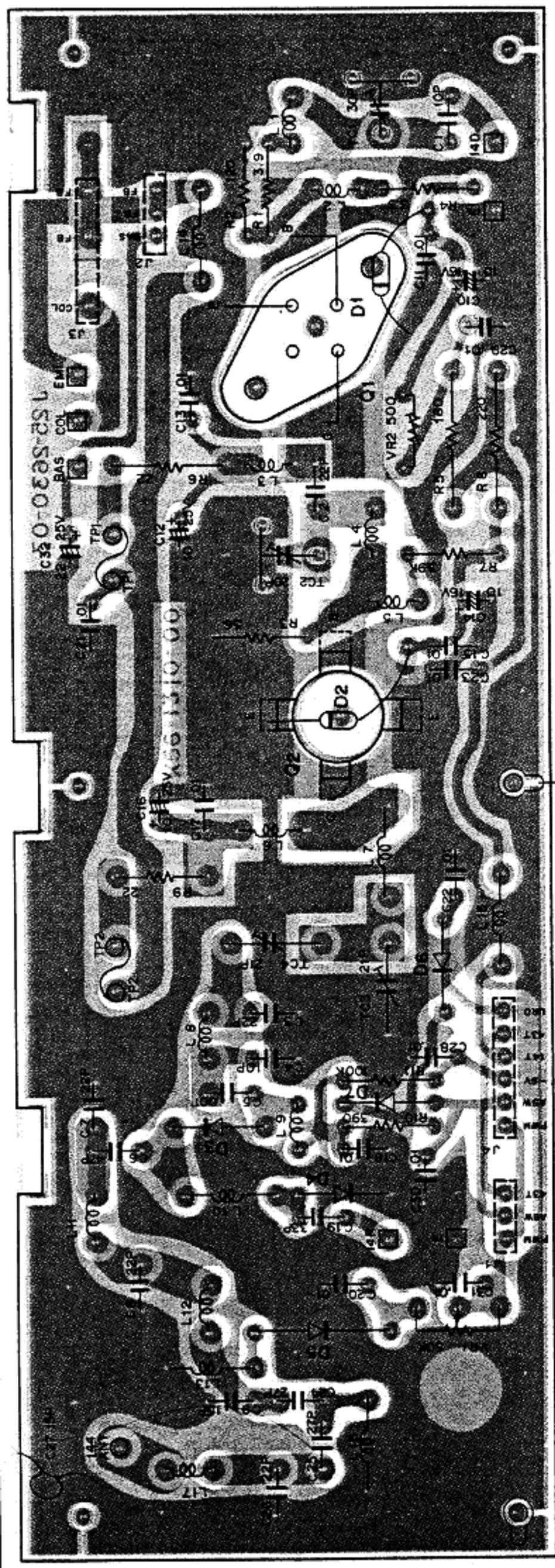

2SD235(Y)

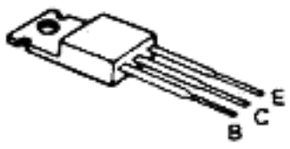

2SC2118

2SC2103A
2SC2380
2SC2381
2SC2391

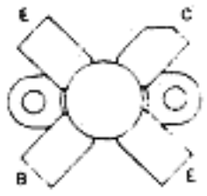

Q1:2SC2118 Q2:2SC2103A D1、2、6、7:1S1555 D3:MI402
D4:1S2588 D5:1N60

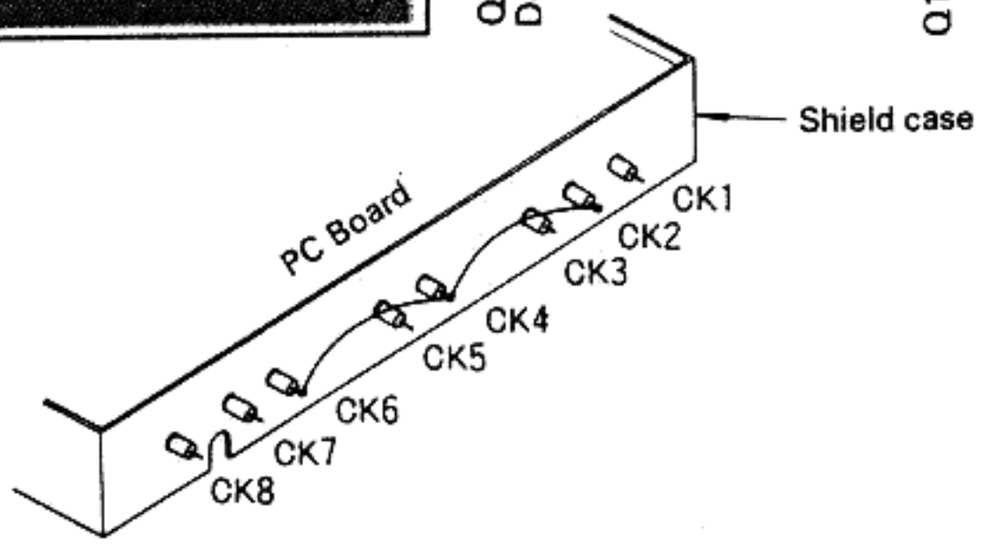

▼ 430 Final Unit (X56-1320-01)

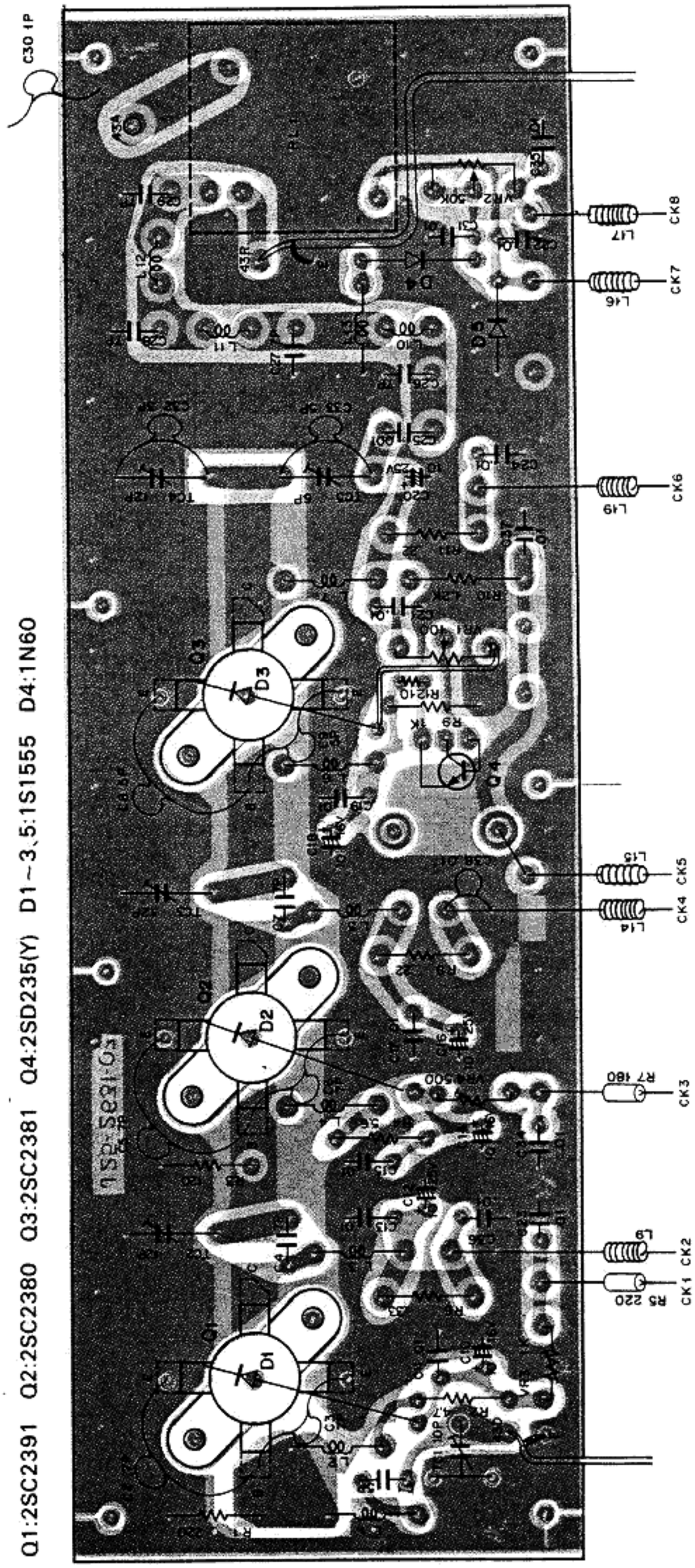

Q1:2SC2391 Q2:2SC2380 Q3:2SC2381 Q4:2SD235(Y) D1~3,5:1S1555 D4:1N60

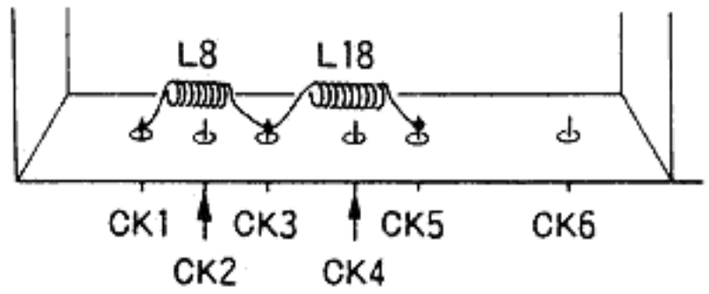

PC BOARD VIEWS

▼ IF Unit (X48-1220-00) ONLY S/N 94○○○○

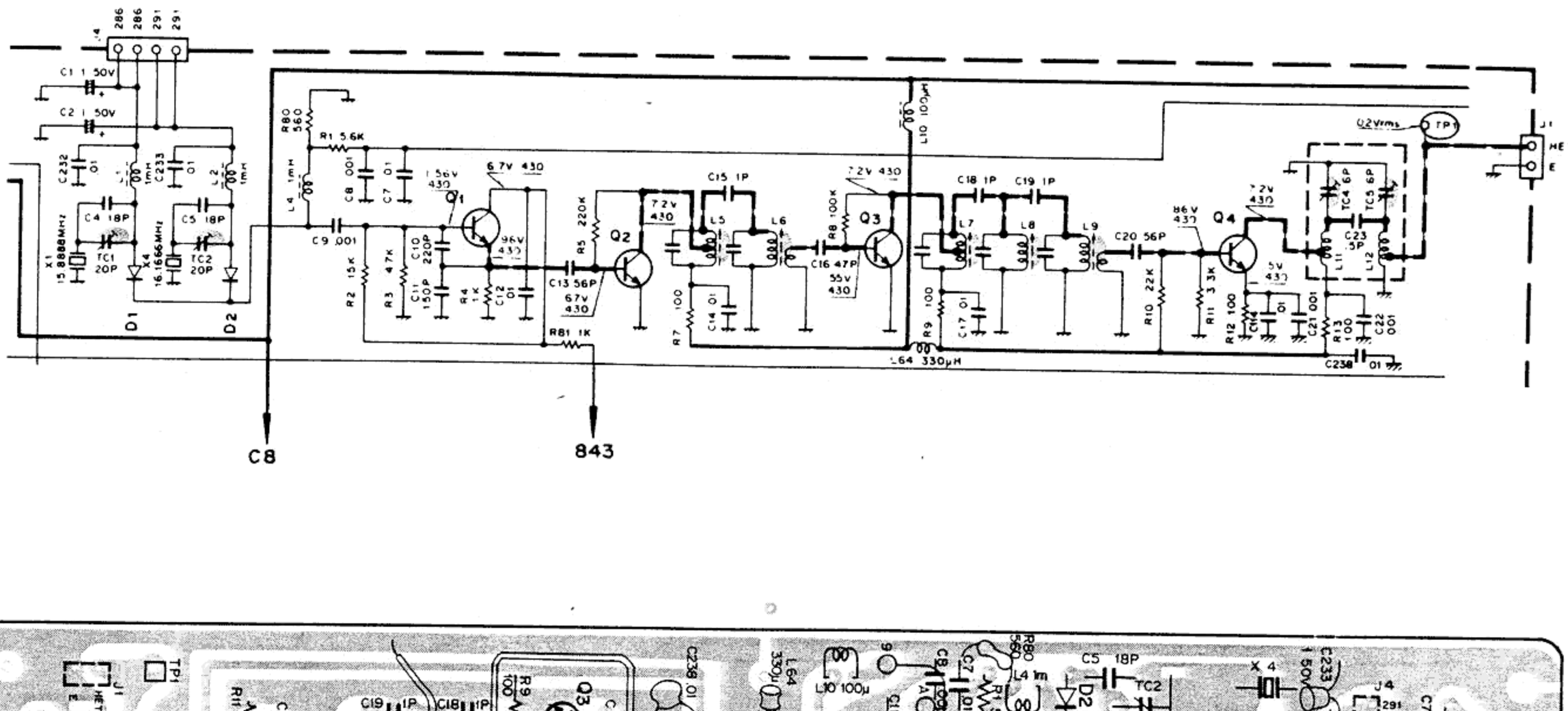

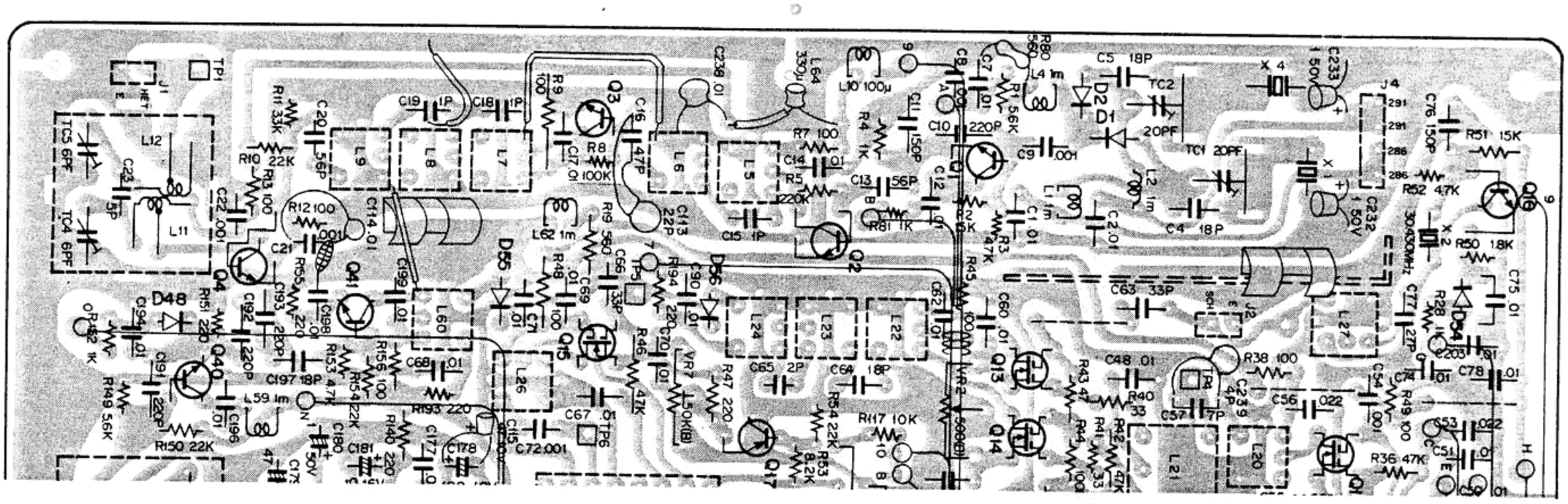

Ref. No.	Parts No.	Description	Re-marks
C1,2	CK45F1H103Z	Ceramic 0.01μF +80%−20%	
C4,5	CC45CH1H180J	Ceramic 18pF ±5%	
C7	CK45F1H103Z	Ceramic 0.01μF +80%−20%	
C10	CM93BD2A221J	Mica 220pF ±5%	
C11	CC45SL1H151J	Ceramic 150pF ±5%	
C12	CK45F1H103Z	Ceramic 0.01μF +80%−20%	
C13	CC45CH1H560J	Ceramic 56pF ±5%	
C14	CK45F1H103Z	Ceramic 0.01μF +80%−20%	
C15	CC45CH1H010C	Ceramic 1pF ±0.25pF	
C16	CC45CH1H470J	Ceramic 47pF ±5%	
C17	CK45F1H103Z	Ceramic 0.01μF +80%−20%	
C18,19	CC45CH1H010C	Ceramic 1pF ±0.25pF	
C20	CC45CH1H560J	Ceramic 56pF ±5%	
C21,22	CK45D1H102M	Ceramic 0.001μF ±20%	
C232,233	CE04W1H010	Electrolytic 1μF 50WV	
C114	CK45F1H103Z	Ceramic 0.01μF +80%−20%	
C238	CK45F1H103Z	Ceramic 0.01μF +80%−20%	
	Not used C148,149, 164,169,172,173		
D1,2	V11-0414-05	Diode 1S2588	
D36,60		Not used	

Ref. No.	Parts No.	Description	Re-marks
L1,2	L40-1021-25	Ferri-inductor 1 mH	
L4	L40-1021-03	Ferri-inductor 1 mH	
L5,6	L34-0752-05	Tuning coil	
L7～9	L34-0753-05	Tuning coil	
L10	L40-1011-03	Ferri-inductor 100μH	
L11,12	L34-0756-05	Tuning coil	
	Not used L25,39, 45,49,52,55		
Q1～3	V03-0079-05	Transistor 2SC460B	
Q4	V03-0287-05	Transistor 2SC387A	
	Not used Q25,37		
	Not used R6,14, 165,200,210		
TC1,2	C05-0306-05	Ceramic Trimmer 20pF	
TC4,5	C05-0062-05	Ceramic Trimmer 6pF	
J1	E40-0273-05	Mini connect wafer, 2P	
J4	E40-0473-05	Mini connect wafer, 4P	
X1	L77-0843-05	Crystal 15.888 MHz	
X4	L77-0842-05	Crystal 16.1666 MHz	

PC BOARD VIEWS

▼ MIX Unit (X48-1230-00) ONLY S/N 94○○○○

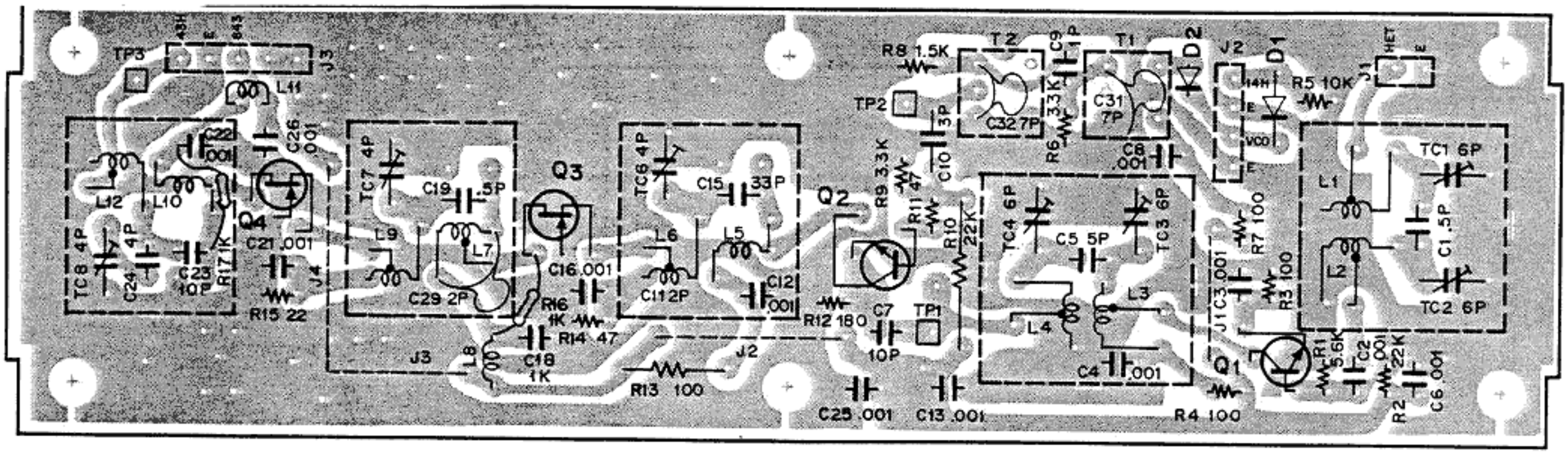

Q1,2 : 2SC387A , Q3,4 : 2SK125, D1,2 : 1S2588

Note: Insert Q2,3,4 as far as they will go, and make the pins short.

2SC1815(Y)

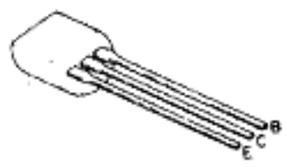

2SC387A
2SC1000(GR)

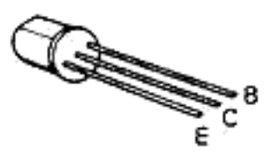

2SK125

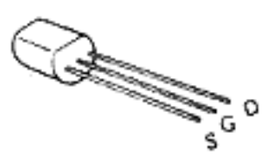

MIX UNIT(X48-1230-00)

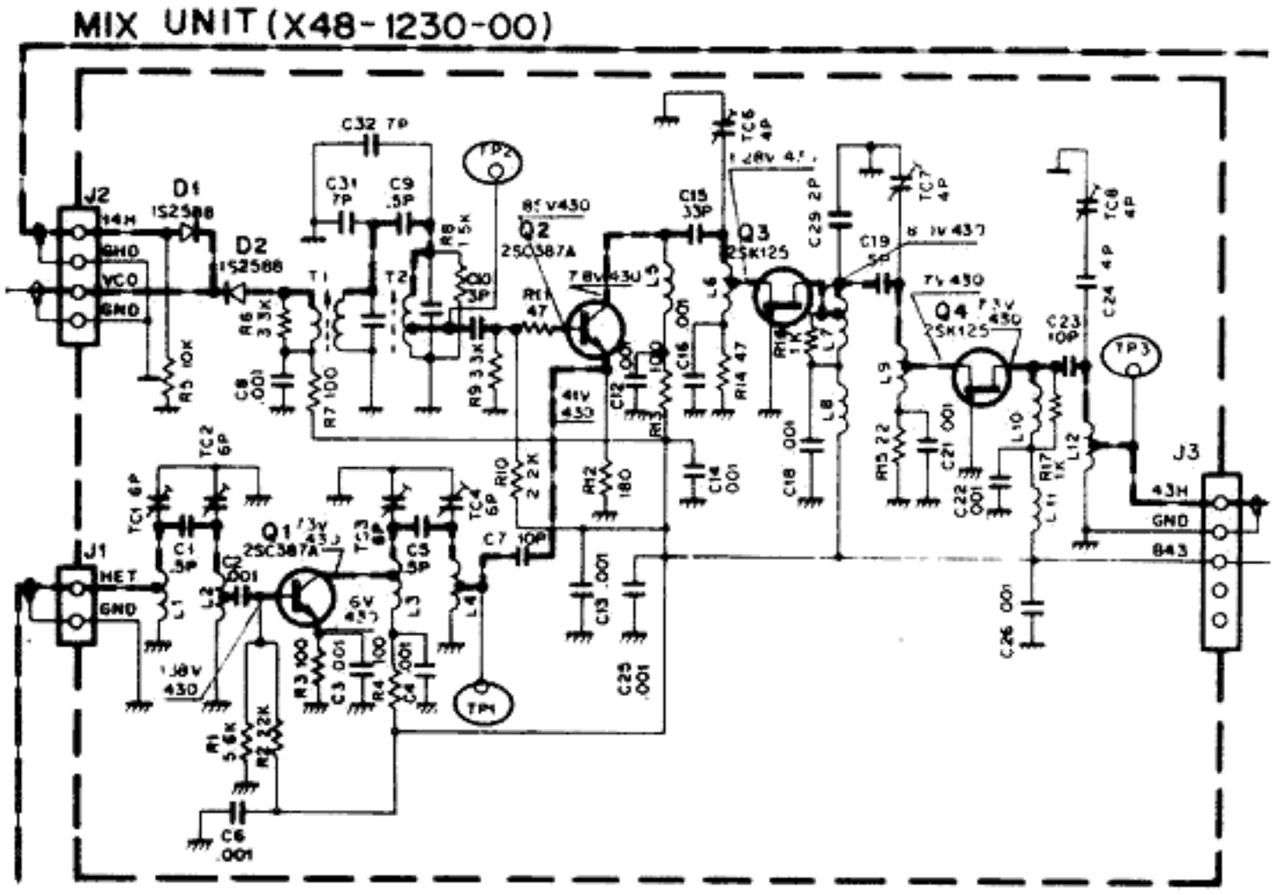

Ref. No.	Parts No.	Description			Re-marks
C1,5	CC45CH1H0R5C	Ceramic	0.5pF	±0.25pF	
C7	CC45CH1H100D	Ceramic	10pF	±0.5pF	
C9	CC45CH1H0R5C	Ceramic	0.5pF	±0.25pF	
C10	CC45CH1H030C	Ceramic	3pF	±0.25pF	
C15	CC45CH1H330J	Ceramic	33pF	±5%	
C19	CC45CH1H0R5C	Ceramic	0.5pF	±0.25pF	
C23	CC45CH1H100D	Ceramic	10pF	±0.5pF	
C24	CC45CH1H040C	Ceramic	4pF	±0.25pF	
C29	CC45CH1H020C	Ceramic	2pF	±0.25pF	
C31,32	CC45SL1H070C	Ceramic	7pF	±0.25pF	
	Not used C11,14, 17,20,27,28,30				
D1,2	V11-0414-05	Diode	1S2588		
L1	L34-0751-05	Coil			☆
L2	L34-0756-05	Coil			☆
L3,4	L34-0751-05	Coil			☆

Ref. No.	Parts No.	Description	Re-marks
L5	L33-0605-05	Choke coil	
L6,7	L34-0824-05	Coil	☆
L8	L33-0002-05	Choke coil 1μH	
L9	L34-0824-05	Coil	☆
L10	L33-0605-05	Choke coil	
L11	L33-0002-05	Choke coil	
L12	L34-0825-05	Coil	☆
Q1,2	V03-0287-05	Transistor 2SC387A	
Q3,4	V09-1004-26	FET 2SK125	
T1,2	L34-0748-05	Tuning coil	
TC1～4	C05-0062-05	Ceramic Trimmer, 6P	
TC5		Not used	
TC6～8	C05-0308-05	Ceramic Trimmer, 4P	

DISASSEMBLY

1. How to remove the cases

A. How to remove the top case

1) Remove the four screws above the top case, and remove the six screws on both sides.
2) Lift up the upper case located towards the back side of the set. At this time, since the speaker cord is in a connected state, pay special attention to the speaker cord when the case is lifted.
3) Remove the protective sheet attached to the volume knob on top of the AF/VOX unit.
4) Remove the speaker cord from the connector of the AF/VOX unit.

B. How to remove the lower case

1) Remove the upper case in accordance with the procedure outlined in A.
2) Remove the 4 screws located on both sides and the 4 screws located at the bottom.
3) Lift up the case and make the removal.

C. Precautions for mounting the upper case

1) Firmly insert the speaker cord into the designated terminal of the AF/VOX unit.
2) Attach the upper case while paying attention to the 3 volume knobs located at the top of the set.

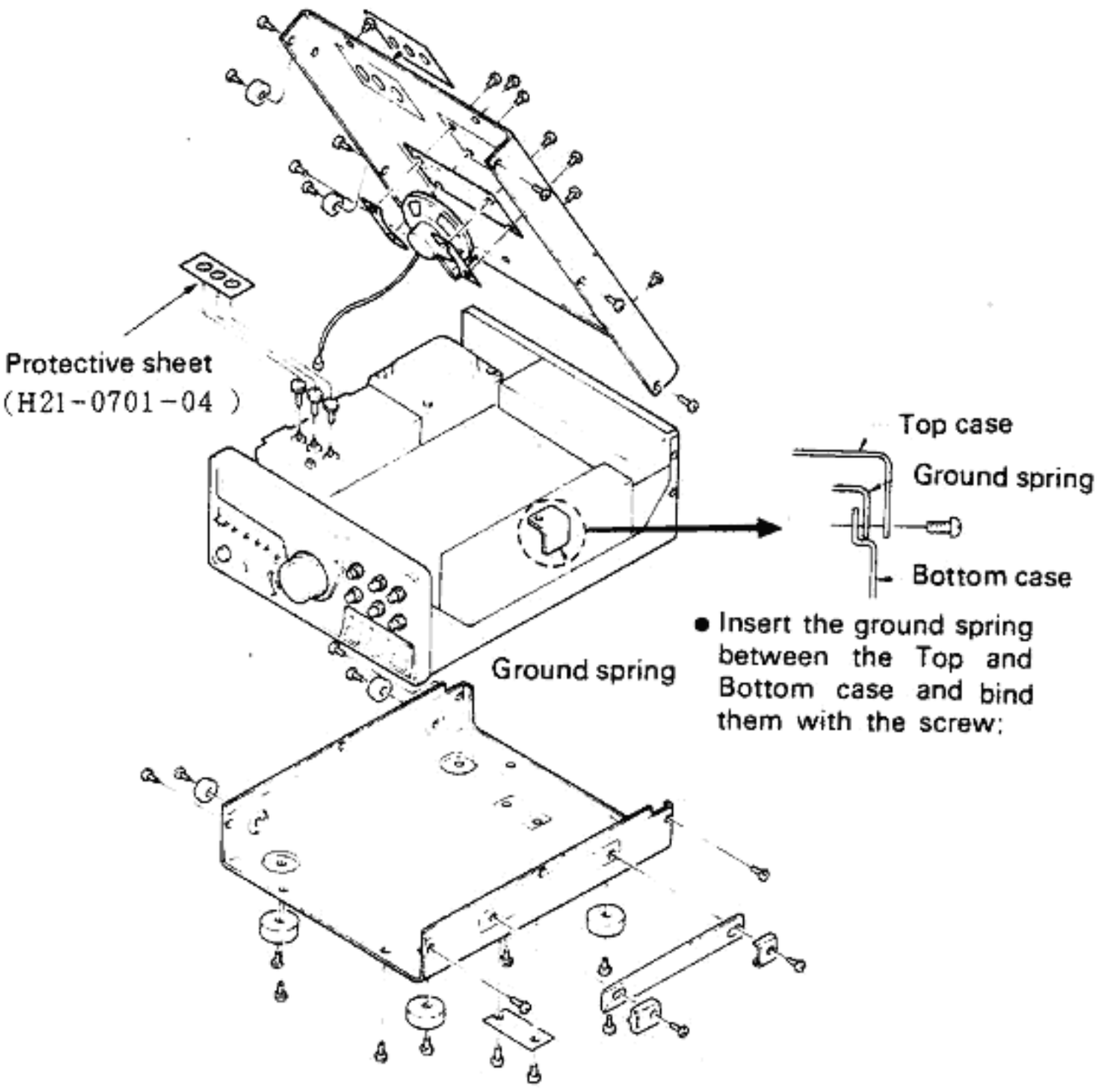

Fig. 1

2. How to incline the front panel

1) Remove the top and bottom cases.
2) Remove the screws of the RF Unit side, and remove the earth wire located between the RF Unit and the MIC VR Unit.
3) Remove the 4 screws located on both sides, then incline the front panel forward (In case the front panel is erected and the screws are tightened, pay special attention so that the wires will not be pinched in between.)
4) Pull out the IN of MIX (B) Unit and the connector of 43 H.
5) Remove the flat cable located between the display unit and the digital unit from the digital unit side.

http://www.qsl.net/pe3hmp

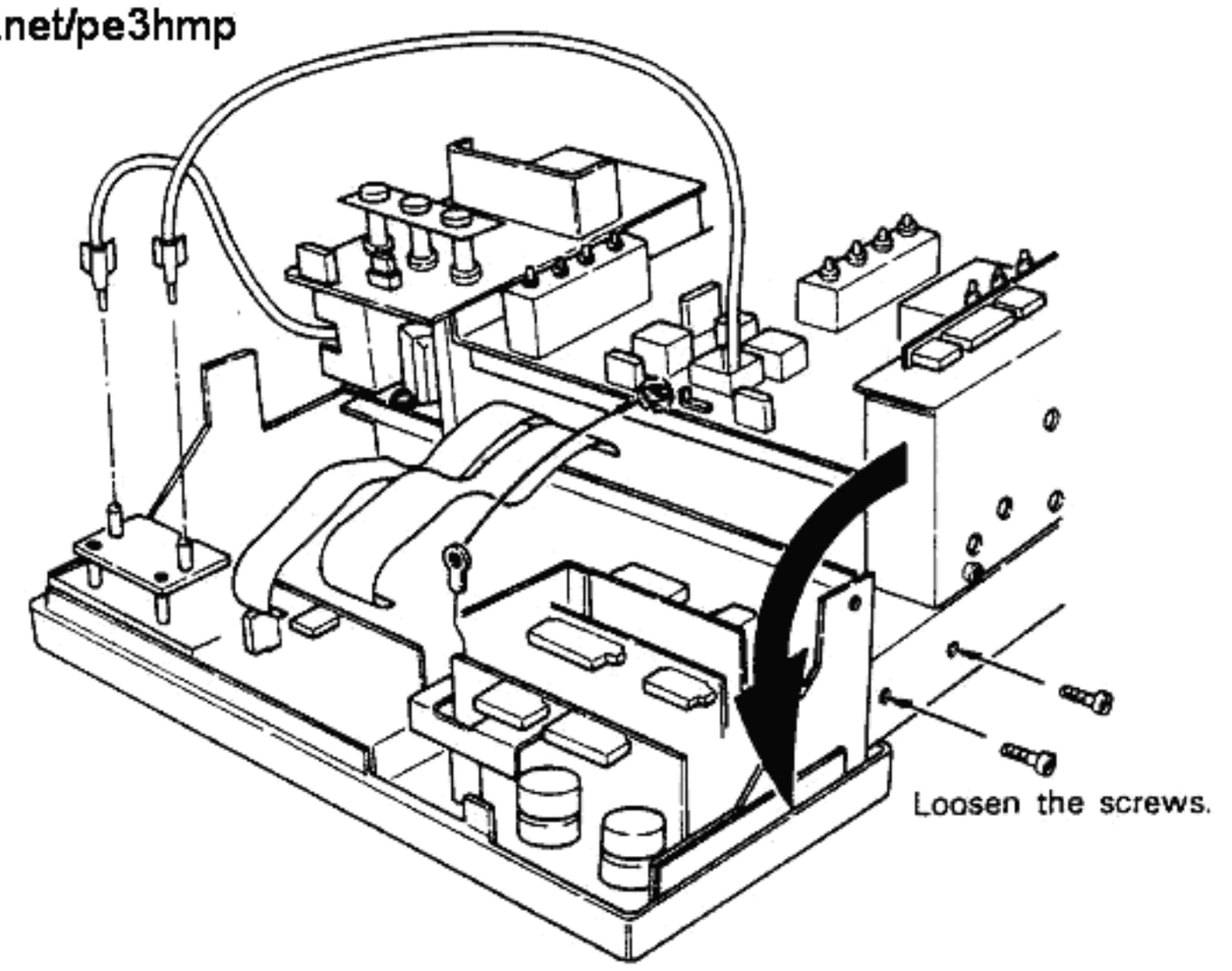

Fig. 2

DISASSEMBLY

3. Inspection and repairing of MIC VR Unit/AF VR Unit

1) Remove each knob/nut of MIC VR Unit or AF VR Unit.
2) Incline the front panel.
3) It can be removed from the front panel with the connectors still attached to it.

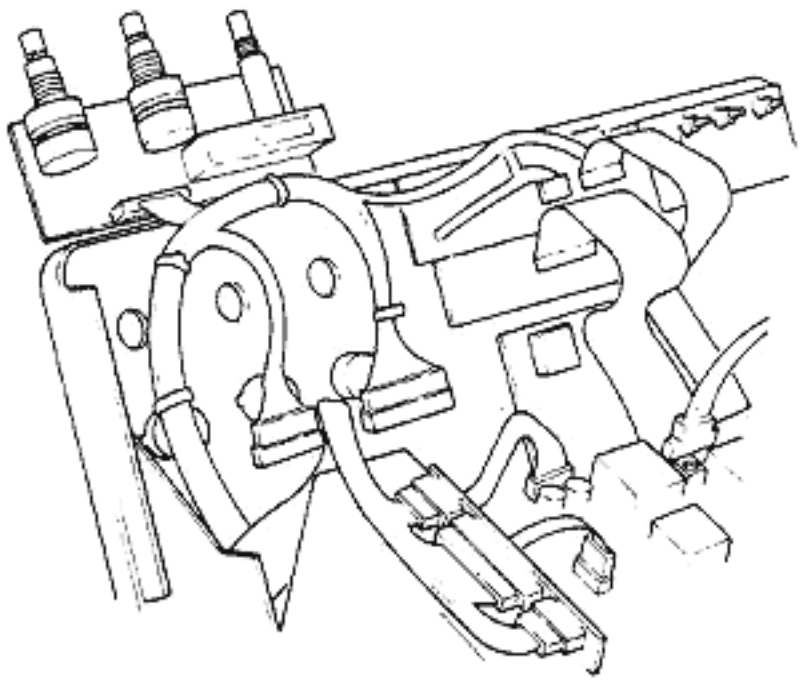

Fig. 3

4. How to remove the 6 key switch unit/band switch

1) Incline the front panel.
2) Remove the connector of the 6 Key Switch ASSY.
3) Remove the 3 screws shown in Fig. 4, then remove the 6 Key Switch Unit.
4) Remove the nut which holds the Band Switch ASSY in place as shown in Fig. 4.
5) Remove the Band Switch ASSY by sliding it slightly sidewise.

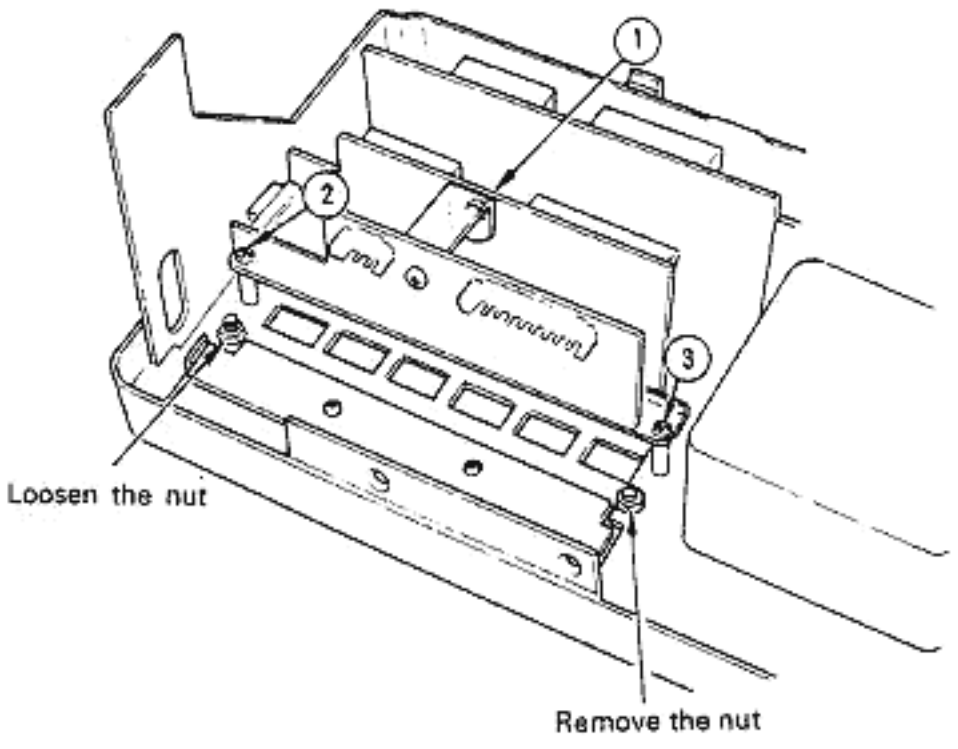

Fig. 4

5. How to remove the encoder unit

1) After removing the top and bottom cases, incline the front panel.
2) Remove the VFO knob with a 2.0 mm hexagonal spanner.
3) Remove the attachment nut of the Encoder Unit.
4) Remove the J2 Connector (55) of the Pulse Generating Unit.

6. Confirmation of the Tact Switch Stroke

1) Make certain that there is no play when the knob is touched.
2) Make certain that the stroke adjustment screw is in contact with the tact switch, but not pushing it.
3) Make certain the operation advances precisely one step each when the band knob is pressed.

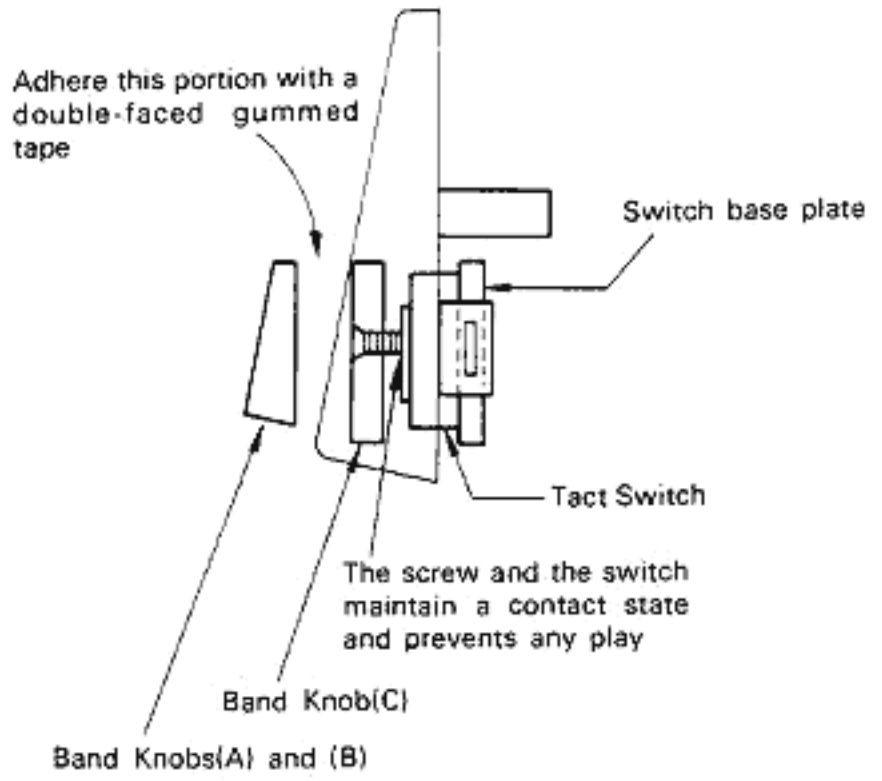

Fig. 5

7. Removing the RF unit

A. Removing the RF PC Board

1) Remove the all connector from RF unit.
2) Remove the condenser soldered to the FB terminal of the 430 MHz Final.
3) Remove the twelve screws (1 ~ 12) (as shown in Fig. 6)

B. Remove the RF PC Board with mounting bracket

1) Remove the all connector from RF unit
2) Remove the condenser soldered to the FB terminal of the 430 MHz Final.
3) Remove the screw (1, 5 ~ 11) (as shown in Fig. 6)

DISASSEMBLY

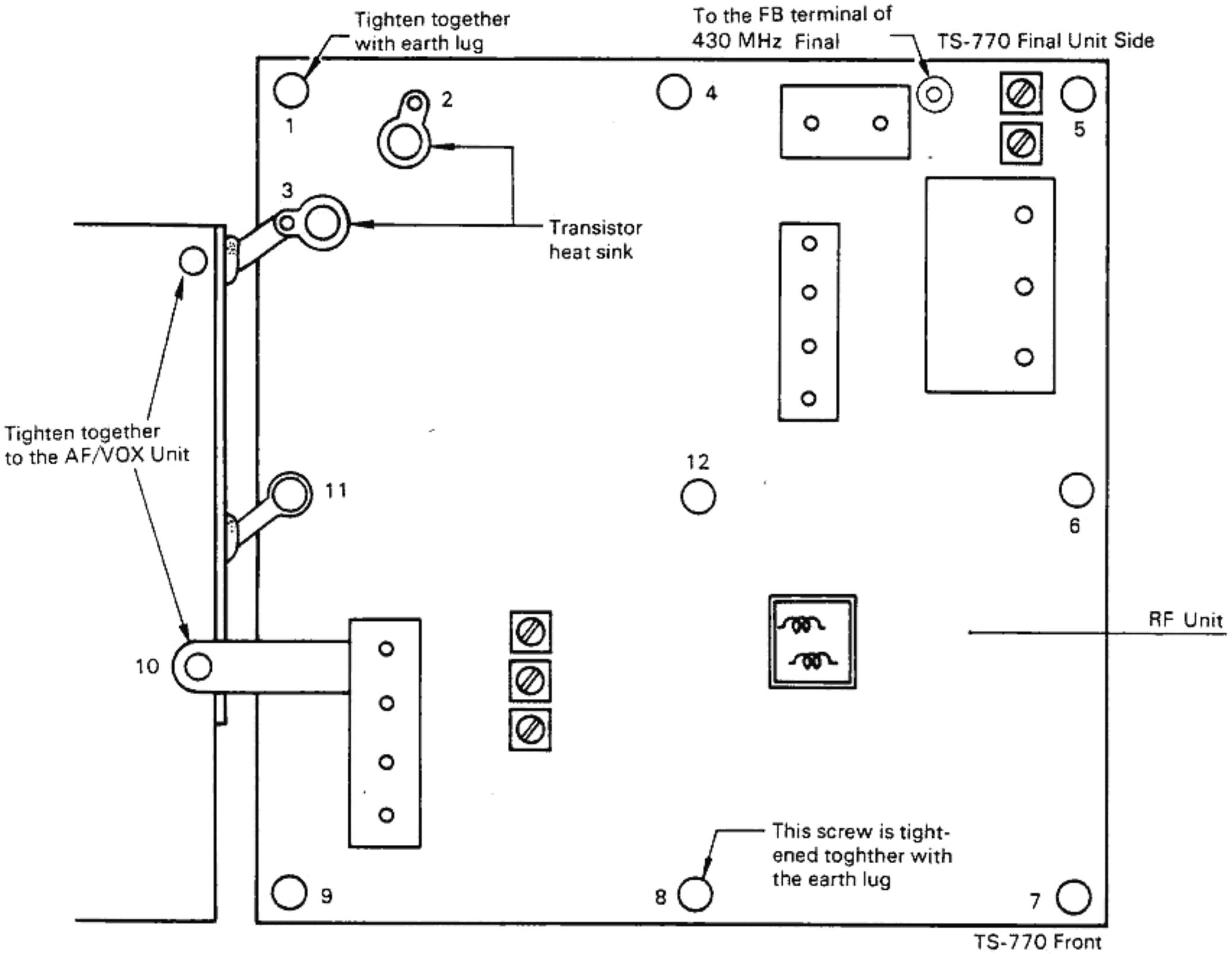

Fig. 6

8. How to remove the Final Unit

1) Remove the earth wire between the 430 unit and the PLL unit by removing the screw on the 430 unit side.
2) Disconnect the wire of FB terminal on the 430 unit.
3) Pull out the connector of the 144 unit.
4) Pull out the 14D, 43D, 14R, 43R connectors of the RF unit.
5) Remove the screw which holds the heat sink in place.
6) Remove the final unit from the back panel.

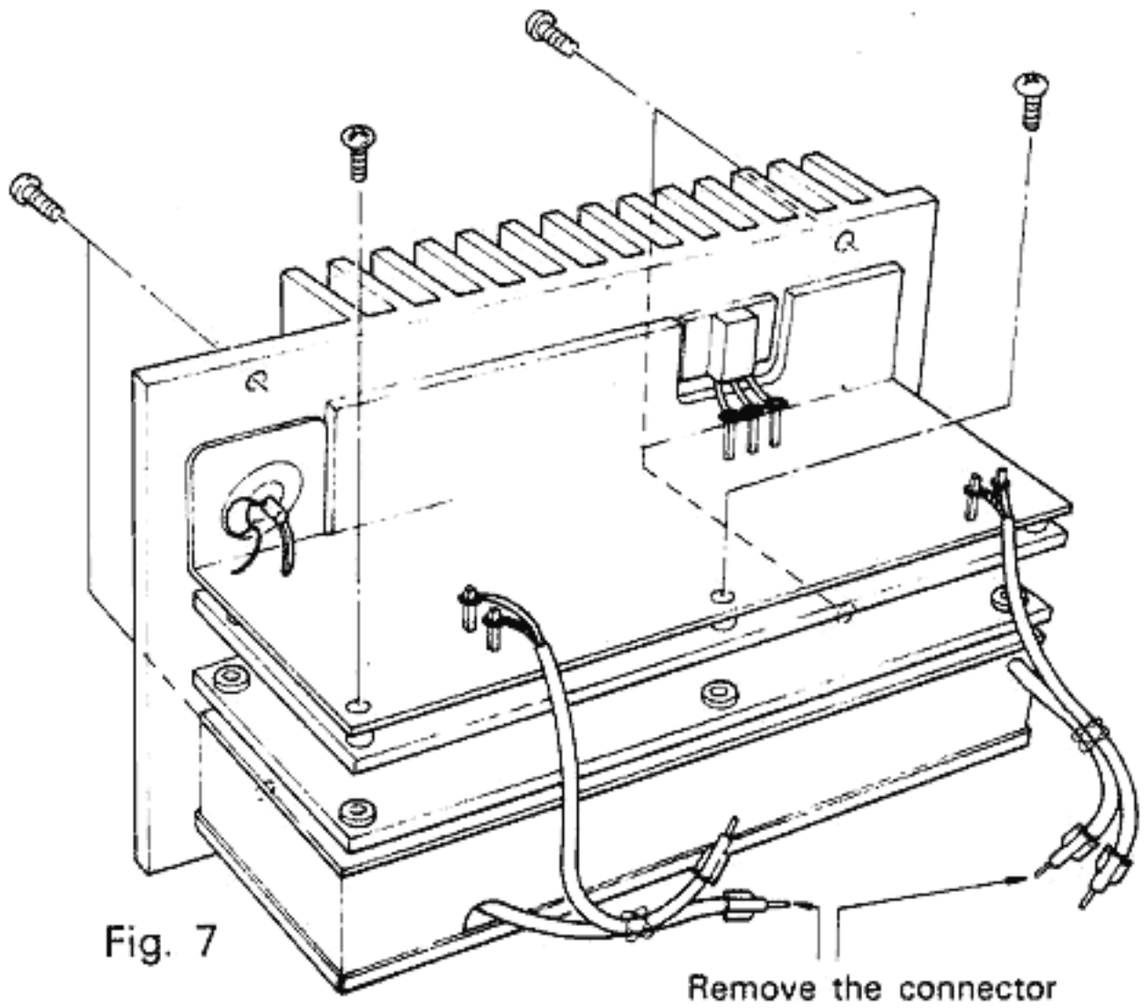

Fig. 7

9. How to remove the Flat Cable

1) The flat cable is removed by pulling slightly on the left side and right side alternately, as shown in Fig. 8.

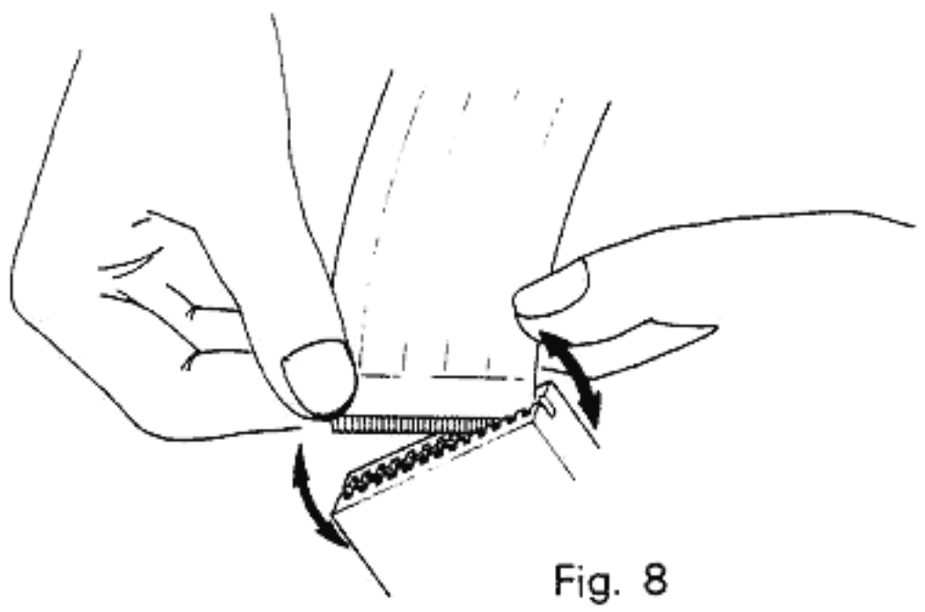

Fig. 8

ADJUSTMENTS

Testing Instruments

1. **Tester**
   - High input impedance
2. **RF VTVM (RF V.M)**
   - Input impedance: 1MΩmin., 2pF max
   - Votage range: F.S = 10 mV ~ 300V
   - Frequency range: Up to 450 MHz
3. **Frequency Counter (F count)**
   - Input sensitivity: Approx. 50 mV
   - Frequency range: Up to 450 MHz
4. **DC Power**
   - Voltage: 10V ~ 17V, variable
   - Current: 6A min.
5. **Power Meter**
   - Measurement range Approx. 20W
   - Input impedance: 50 Ω
   - Frequency range: 450 MHz
6. **AF VTVM (AF V.M)**
   - Input impedance: 1MΩmin.
   - Voltage range: F.S = 1 mV ~ 30V
   - Frequency range: 50 Hz ~ 10 kHz
7. **AF Generator (AG)**
   - Output frequency: 100 Hz ~ 10 kHz
   - Output voltage: 0.5 mV ~ 1V
8. **Linear Detector**
   - Frequency range: 450 MHz
9. **Field Strength Meter**
   - Frequency range: 450 MHz
10. **Directional Coupler**
11. **Oscilloscope**
    - High sensitivity oscilloscope with horizontal input terminal
12. **SSG**
    - Frequency range: 144 MHz and 430 MHz band.
    - Modulation: AM and FM MOD.
    - Output level: —10 dB to 120 dB
13. **Dummy Load**
    - 8Ω, 5W (approx.)
14. **Noise Generator**
    - Must generate ignition-like noise containing harmonics beyond 430 MHz.
15. **Sweep Generator**
    - Sweep range: 144 MHz and 430 MHz bands

Preparation

1) Unless otherwise specified, knobs and switches should be set as follows:

POWER SW	ON
SEND/REC SW	REC
VOX/MAN SW	MAN
ALC/RF SW	RF
LOW/HI SW	HI
TONE SW	OFF
VFO SW	CIR
MODE SW	CW
FUNCTION SW	A
RF GAIN VR	MAX(FULL COUNTER CLOCKWISE)
SQUELCH VR	MIN
S/F SW	OFF(SLOW)
SCAN SW	OFF
SEARCH SW	OFF
F.LOCK SW	OFF

2) Adjustments (trimmers, coils, etc.) should be made using an insulated rod such as a bakelite rod.
3) During adjustments of the receiver section, do not set the stand-by switch to SEND as this will damage the SSG.
4) Before connecting the power cord, be sure to set the power switch and VOX switch to OFF.

   Note: When the power switch is turned ON in the ON position of the VOX switch, the transceiver is momentarily set in transmit mode. Special care should be taken when adjusting the receiver section.
5) The output level of SSG is indicated as SSG's open circuit.

ADJUSTMENTS

A. TX/RX SECTION (COMMON)

Item	Conditions	Check point			Adjusting point			Standard	Remarks
		Testing Instruments	Unit	Terminal	Unit	Parts	Method		
1. Resistance measurement	1) MEMORY B.U SW on rear panel: ON	Ohm-meter	FINAL (144)	COL				More than 30Ω	
				FB				More than 10Ω	
			AVR	C8				More than 10Ω	Open VR
				814				More than 30Ω	
				843				More than 10Ω	
			RE	ASW	300Ω				
				14T	5Ω				Check
				43T	250Ω			Not earthed	
				L16					
				L35	5Ω				VEL
			PLL (A)	8V					
				5V				Not earthed	
			MIC VR	5V				Not earthed	
2. AVR	1) POWER SW: OFF POWER terminal: AC P.S. (220V) SEND/RED SW: REC	DC V.M	AVR	BP				More than 7.0V	Check
		B.U lamp						ON	Check
	2) MEMORY B.U SW on rear panel: OFF	B.U lamp						OFF	Check
	3) POWER SW: ON TONE SW: OFF VFO SW: CIR FUNCTION SW: A SCAN SW: OFF SEARCH SW: OFF F.LOCK SW: OFF	DC V.M	AVR	13.8	AVR	VR1	Set to 13.8V	±0.1V	
				RB		VR3	Set to 0.6V	±0.1V	
				TBL				Less than −0.24V	
				−6				−6V ±0.5V	Check
				C8				8V ± 0.4V	
				RL				Less than 0.3V	
				14S				More than 4V	
				43S				More than 4V	
	4) BAND SW: 144	DC V.M	AVR	814				8V ± 0.3V	Check
				843				Less than 0.3V	
	5) BAND SW: 430	DC V.M	AVR	814				Less than 0.3V	Check
				843				8V ± 0.3V	
	6) MODE SW: USB RF GAIN VR: MAX	DC V.M	IF	RFI	IF	VR5	Set to 1.7V		
	7) SSB MIC VR: MIN SEND/REC SW: SEND	DC V.M	AVR	TBL	AVR	VR2	Set to 0.3V	±0.03V	
				RB				Less than −0.24V	Check
	8) MODE SW: USB SSB MIC VR: MIN BAND SW: 145								
	• SEND/REC SW: SEND	DC V.M	RF	14T	RF	VR1	Set to 9.0V		
	• SEND/REC SW: REC	DC V.M	RF	14T				Less than 0.3V	Check

ADJUSTMENTS

TX/RX SECTION (COMMON)

Item	Conditions	Check point			Adjusting point			Standard	Remarks
		Testing Instruments	Unit	Terminal	Unit	Parts	Method		
AVR	9) BAND SW: 430 • SEND/RED SW: SEND	DC V.M	RF	TP8	RF	VR2	Set to 9.0V		
	• SEND/REC SW: REC	DC V.M	RF	TP8				Less than 0.3V	Check
	10) SEND/REC SW: REC	DC V.M	PLL (A)	8V				8V ± 0.3V	Check
				5V				5V ± 0.25V	
LAMP	1) Continued from previous item	Meter lamp						All 3 lamps are ON	Check
		DISPLAY						All 8 digits are ON	
		ON AIR lamp						OFF	
	2) HI/LOW SW: HI MODE SW: FM. USB. LSB CW	LOW lamp						OFF	Check
	3) HI/LOW SW: LOW • MODE SW: CW.LSB.USB	LOW lamp						OFF	Check
	• MODE SW: FM	LOW lamp						ON	
	4) F LOCK SW: ON	F. LOCK lamp						ON	Check
	OFF	F. LOCK lamp						OFF	
	5) RIT SW: ON	RIT lamp						ON	Check
	OFF	RIT lamp						OFF	
	6) S/F SW: ON (FAST)	FAST lamp						ON	Check
	OFF (SLOW)	FAST lamp						OFF	
VCV	1) MODE SW: USB FUNCTION SW: A SCAN SW: OFF SEARCH SW: OFF F. LOCK SW: OFF BAND SW: 144 VFO dial: 500	Synchro-scope	PLL (B)	TP4	PLL (B)	L9. 8	Adjust L9 and L8 to obtain maximum output. Adjust L8 for the clipped wave form (see figure at right).	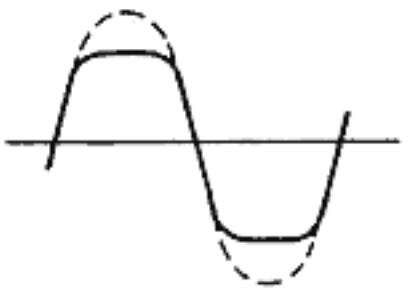	
	2) VFO dial: 000	DC V.M	PLL (B)	TP3 (R46)	PLL (B)	TC1	Set to 2.0V		
				TP1				More than 0.7V	Check
		RF V.M	PLL (A)	TP2	PLL (A)	T3.4 T5.6	MAX (repeat)	(More than 0.12V)	Fig. in ( ) is a value for reference.
	3) VFO dial: 500	RF V.M	PLL (A)	TP4	PLL (A)	T1.2	MAX (repeat)	(More than 0.3V)	
					VCO	L4.			
	4) VFO dial: 000	DC V.M	PLL (A)	TP7	VCO	L1	Set to 1.2V		
	5) BAND SW: 434 VFO dial: 000	RF V.M	PLL (A)	TP4	VCO	L4	MAX		
				TP1				More than 0.25V 0.V	Check

ADJUSTMENTS

Item	Conditions	Check point			Adjusting point			Standard	Remarks
		Testing Instruments	Unit	Terminal	Unit	Parts	Method		
5. CAR	1) SEND/REC SW: REC MODE SW: CW	RF V.M	CAR	TP1	CAR	L6	MAX	More than 0.4V	○V
	2) MODE SW: LSB.USB.FM	RF V.M	CAR	TP1				More than 0.4V	Check ○V
	3) MODE SW: FM	F. Count	CAR	TP1	CAR	TC3	8.8300 MHz	±500 Hz *Coarse adjustment.	
	USB					TC1	8.8315 MHz		
	LSB					TC4	8.8285 MHz		
	4) MODE SW: CW CAR VR: MIN SEND/RED SW: SEND	F. Count	CAR	TP1	CAR	TC2	8.83070 MHz	±100 Hz	
6. OSC	1) MODE SW: FM SEND/REC SW: SEND	F. Count	IF	TP6	IF	TC3	21.6000 MHz		
	2) MODE SW: USB	F. Count	IF	TP9	IF	L27	30.4300 MHz	±20 Hz	
7. VCO	1) VFO SW: CIR BAND SW: 145 • VFO dial: 000.0	F. Count	RF	TP4	PLL (B)	VR1	Set the VR1 for frequency difference within 20 Hz between VFO dial 000.0 and 999.9	20 Hz	VR2: Coarse adjustment VR1: Fine adjustment
	• BAND SW: 144 VFO dial: 999.9								
	2) VFO dial: 000 MODE SW: USB	RF V.M	RF	TP4	RF	T18	MAX		
8. RIT	1) RIT SW: ON RIT VR: 12 o'clock position	F. Count	RF	TP4			Check counter frequency		
	2) RIT SW: OFF	F. Count	RF	TP4	AF VR	VR4	Set to the frequency in Item 1)	±20 Hz	
	3) RIT SW: ON • RIT VR: MIN • RIT VR: MAX	F. Count	RF	TP4				Check the frequency varries more than ±2 kHz from the frequency in Item 1).	Check
	4) SEND/REC SW: SEND RIT VR: Turn to left and right.	F. Count	RF	TP4				Frequency should remain unchanged	Check
9. VCO	1) MODE SW: USB SEND/REC SW: SEND BAND SW: 145	RF V.M	RF	D8 cathode	RF	T9, 8	MAX * If the core of T9 comes off the bobbin, set it on top of the bobbin.	(1V)	
10. ALC. M	1) ALC/RF SW: ALC ALC terminal on the RF unit: Connect 10 MΩ resistor between the terminal and the chassis.	ALC.M			RF	VR3	Set to "0" point on ALC meter.		
	2) ALC terminal on the RF unit: Remove the resistor.								

ADJUSTMENTS

B. TX SECTION (144M BAND)

Item	Conditions	Check point			Adjusting point			Standard	Remarks
		Testing Instruments	Unit	Terminal	Unit	Parts	Method		
1 Setting	1) Rear panel 144 ANT terminal: POWER M POWER terminal: DC P.S (13.8V)								
	2) RF U 43D terminal: Remove coax-cable TC9: MIN TC10.12.13: MAX								
2 Bias adjustment	1) BAND SW: 145	DC A.M	FINAL (144)	TP1	FINAL (144)	VR2		25 mA	Remove the jumper wire and connect the ampere meter in series
3 Power setting	1) MODE SW: CW POWER SW: ON BAND SW: 145 VFO dial: 000 SEND/REC SW: SEND	RF V.M	IF	TP4	IF	L16.17	MAX (repeat)	(0.03V)	
				TP6	IF	L20.21 L22.23 L24.26	MAX (repeat)	(0.3V)	
	2) RF U 14D terminal: Connect coaxial cable.	POWER.M (DC A.M)			RF	TC7 T5.6.7 TC8.9 TC10. TC11	MAX (repeat) * Precisely adjust the final TC1 ~ 4	More than 18W	[Note for adjustments of TC8 and 9] Set the capacity of TC9 to minimum and adjust TC8 and TC9 in that order.
					FINAL (144)	TC1.2 TC3.4			
4 ALC	1) Continued from previous item.	POWER.M			RF	TC13	Set to 12W		
	2) ALC/RF SW: ALC CAR VR: Adjust so that the ALC meter pointer indicates the ALC zone.	ALC.M			IF	L16.17 L20.21 L22.23 L24.26	Adjust each coil and trimmer until the ALC meter reads max. Repeat this procedure.		If ALC meter deflects excessively, adjust CAR VR.
					RF	TC7 T5.6.7 TC8.9 TC10.11			[Note for adjustments of TC8 and 9] Set the capacity of TC9 to minimum and adjust TC8 and TC9 in that order.
	3) CAR VR: MAX	POWER.M DC A.M						Power: 12W DC.A: Less than 6A	Check
		ALC.M			RF	VR4	Set to "10" on RF scale.		
5 RF.M	1) ALC/RF SW: RF	RF.M			FINAL (144)	VR1	Set to "8" on RF scale.	±2	
6. Band edge	1) BAND SW: 144 ALC/RF SW: ALC	POWER.M DC A.M ALC.M						POWER: 10W DC.A: Less than 6A ALC.M: More than "9" on RF scale	Check
	2) BAND SW: 145 VFO dial: 999	POWER.M DC A.M ALC.M						POWER: 10W DC.A: Less than 6A ALC.M: More than "9" on RF scale	Check
7. Low power	1) VFO dial: 000 MODE SW: FM LOW/HI SW: LOW	POWER.M						Output is reduced.	Check

ADJUSTMENTS

Item	Conditions	Check point			Adjusting point			Standard	Remarks
		Testing Instruments	Unit	Terminal	Unit	Parts	Method		
	2) SEND/REC SW: REC 144 ANT terminal on rear panel: POWER M(3W)								
	3I SEND/REC SW: SEND	POWER.M			IF	VR7	Set to 1.2W		
	4) BAND SW: 144	POWER.M						0.5W ~ 3W	
	5) BAND SW: 145 VFO dial: 999	POWER.M						0.5W ~ 3W	

C. TX SECTION (430M BAND)

Item	Conditions	Check point			Adjusting point			Standard	Remarks
		Testing Instruments	Unit	Terminal	Unit	Parts	Method		
1 Setting	1) Rear panel POWER terminal: DC P.S (13.8V)								
	2) RF unit 43D terminal: Remove coaxial cable								
2. MIX	1) IF U J4 connector: Remove POWER SW: ON BAND SW: 432 VFO dial: 500	RF V.M	MIX (A)	TP2	VCO	L5.6	MAX (repeat)	More than 0.09V	
	2) IF.U J4 connector: Connect								
	3) BAND SW: 434	RF V.M	MIX (A)	TP3	IF	L2.4, L6.7	MAX (repeat)		
	4) BAND SW: 435	RF V.M	MIX (A)	TP3	IF	L65.66 L68,69	MAX (repeat)		
	5) BAND SW: 434	RF V.M	MIX (A)	TP3	IF	TC1.2	MAX (repeat)		
	6) BAND SW: Set the level of MIX (A) to lower band with 434 or 435	RF V.M	MIX (A)	TP3	MIX (A)	TC1.2 TC3	MAX (repeat)	More than 0.25V	
3. BPF (1)	1) MODE SW: LSB SEND/REC SW: REC IF.U J4 connector: Remove MIX (A).U TP1 terminal: Connect the Sweep generator	Detector Oscilloscope	MIX (B) 43H Sweep generator	MIX (A) L6					

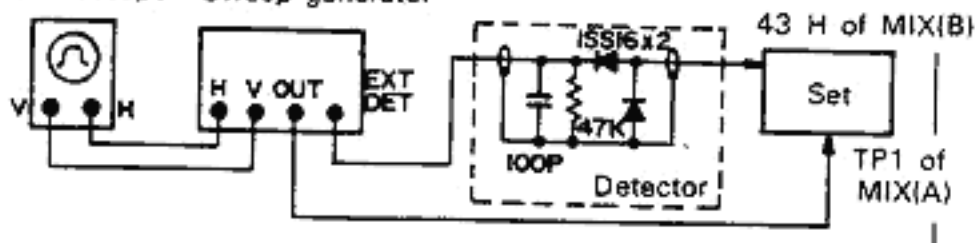

MIX (A)	PT1	Turn the trimmer and the helical wave deflects as shown in Fig. A. Adjust so that the wave enters the 408 ~ 418 MHz band.	

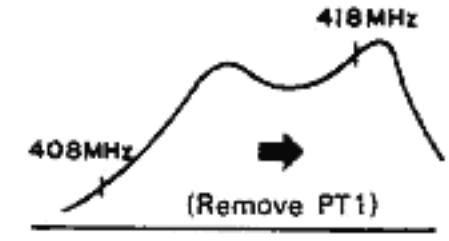

Fig. A

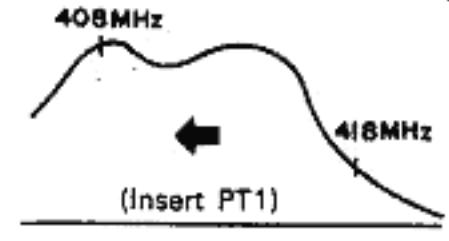

ADJUSTMENTS

X SECTION (430M BAND)

Item	Conditions	Check point			Adjusting point			Standard	Remarks
		Testing Instruments	Unit	Terminal	Unit	Parts	Method		
BPF(1)					MIX (A)	PT2.3	These two trimmers adjust gain and bandwidth. Adjust them so that the markers of 408 MHz and 418 MHz are on the shoulder of the helical wave at maximum gain. *		
					No good		* While adjusting PT 2.3. adjust PT 1 ~ 3 alternately until the wave is stabilized.	(1) the wave should have sufficient height (gain). (2) Top of wave should be as flat as possible. (3) Marker should be on the shoulder of wave.	
							Bandwidth is good but the peak on one side is too low.	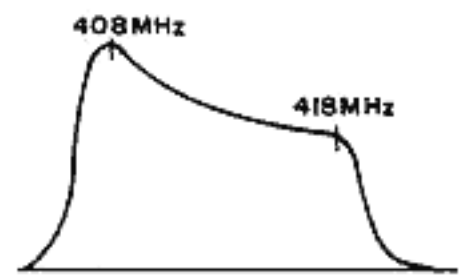	
							Waveform is good but marker is deviated to left.		
							Waveform is good but bandwidth is too wide.		
							The center of wave is too high. It should be flat.	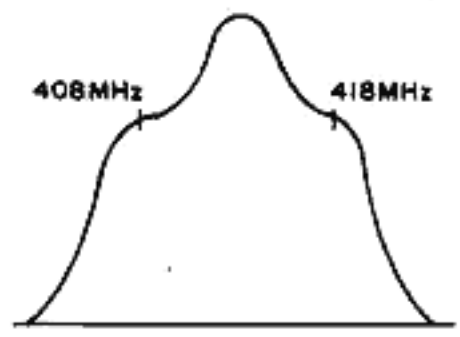	
							Bandwidth is good but the center of wave is too low.	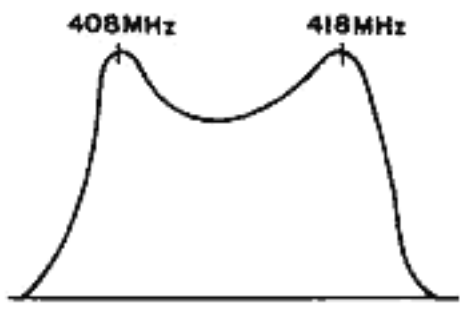	

ADJUSTMENTS

Item	Conditions	Check point			Adjusting point			Standard	Remarks
		Testing Instruments	Unit	Terminal	Unit	Parts	Method		
	2) IF.U J4 connector: Insert MIX (A) TP1 terminal: Remove Sweep MIX (B) 43H terminal: Remove detector BAND SW: 437 VFO dial: 000	RF V.M	RF	TP3	RF	TC15, TC16	MAX		
	3) BAND SW: 430~439 (all bands)	RF V.M	RF	TP3				More than 0.4V	Check
				TP9				More than 0.25V	
4. Bias adjustment	1) BAND SW: 433	DC A.M	FINAL (430)	*1 CK6 CK4 CK2	FINAL (430)	VR1 VR4 VR3		50 mA 40 mA 25 mA	*Remve the pass-through capacitor lead and connect ampare meter in series.
5. Power setting	1) RF.U 43D terminal: Connect coaxial cable BAND SW: 433 VFO dial: 500 MODE SW: CW CAR VR: MAX SEND/REC SW: SEND	POWER.M (DC A.M)			RF	TC1.2 TC3,17 TC5.6	MAX (repeat)	More than 15W	
					FINAL (430)	TC1.2.3 TC4.5	* Precisely adjust the final trimmer.		
6. BPF (2)	1) SEND/REC SW: REC RF.U J2 connector: Remove MODE SW: LSB RF.U J10 connector: Connect the Sweep generator	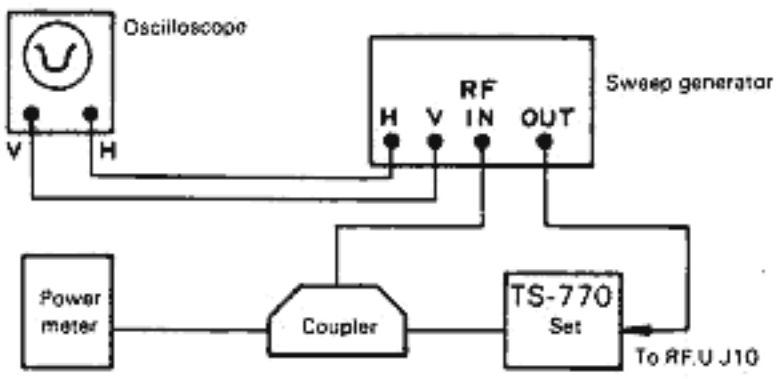							
	2) SEND/REC SW: SEND Sweep output: Level which does not saturate BPF wave. * *Reference ... Proper Sweep generator output derives about 2W output from TS-770.				RF	TC1.2.3 L4,TC17 TC5.6	Adjust these trimmers so that the markers of 430 MHz and 440 MHz are on the shoulder of the wave and that the height is maximum and uniform as shown at right.	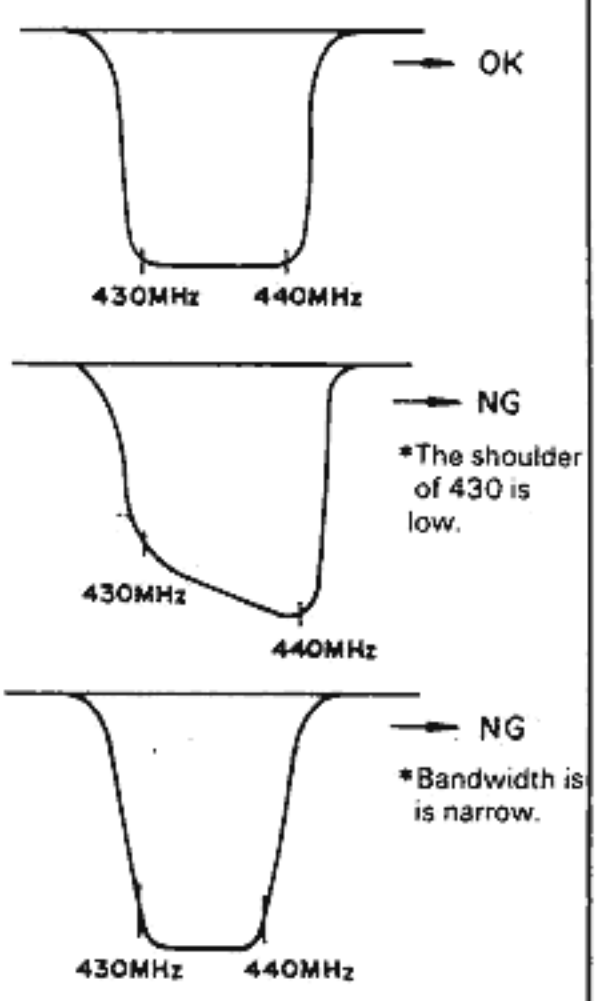	

ADJUSTMENTS

TX SECTION (430M BAND)

Item	Conditions	Check point			Adjusting point			Standard	Remarks
		Testing Instruments	Unit	Terminal	Unit	Parts	Method		
BPF(2)								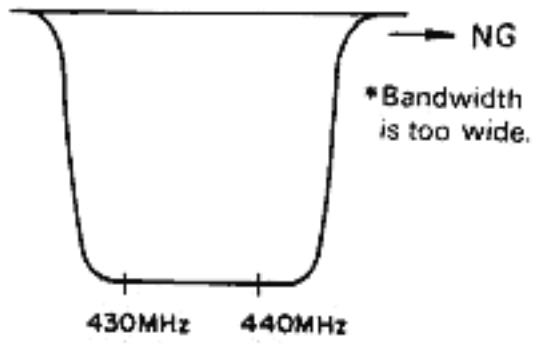	
	3) SEND/REC SW: REC RF. U J2 connector: Insert RF.U J10 connector: Remove Sweep generator								
	4) SEND/REC SW: SEND BAND SW: 430～439 (all bands)	POWER.M						More than 15W	Check
7. ALC	1) BAND SW: 433 VFO dial: 500	POWER.M			RF	TC12	Set to 12W		
	2) BAND SW: 430～439 (all bands) VFO dial: 000 ALC/RF SW: ALC	POWER.M ALC.M						More than 10W More than "7" on RF scale.	Check
	3) BAND SW:439 VFO dial: 999	POWER.M ALC.M						10W More than "7" on RF scale	Check
8. RF.M	1) BAND SW: 433 VFO dial: 500 ALC/RF SW: RF	RF.M			FINAL (430)	VR2	Set to "8" on RF scale	±2	
9. Low power	1) MODE SW: FM LOW/HI SW: LOW	POWER.M						Output is reduced	Check
	2) SEND/REC SW: REC 430 ANT terminal on rear panel: POWER.M (3W)								
	3) SEND/REC SW: SEND	POWER.M			AF/ VOX	VR4	Set to 1.5W		
	4) VFO dial: 000 BAND SW: 430～439 (all bands)	POWER.M						0.3W ～ 5W	Check

ADJUSTMENTS

D. TX SECTION (144/430M BAND)

Item	Conditions	Check point			Adjusting point			Standard	Remarks
		Testing Instruments	Unit	Terminal	Unit	Parts	Method		
1. Setting	1) Rear panel POWER terminal: AC P.S (220V) 144 ANT terminal: POWER.M (20W)								
2. Spurious	1) CAR VR: MAX MODE SW: CW BAND SW: 144 VFO dial: 000 SEND/REC SW: SEND	Spectrum analyzer			IF	VR2	Set 144.76 MHz adjacent spurious to minimum.	Less than −60 dB.	
3. Carrier suppression	1) BAND SW: 145 CAR VR: MIN VFO dial: 000	Spectrum analyzer			IF	VR1 TC6	Adjust alternately to set the indication of analyzer to less than −40 dB.	Less than −40 dB	
	2) SSB MIC VR: MIN MODE SW: LSB.USB	Spectrum analyzer						Less than −40 dB	Check
4. SSB frequency response	1) MODE SW: USB MIC terminal: AG (2 mV/1500 Hz) SSB MIC VR: Set transmit output to 8W.								
	2) MIC terminal: AG (2 mV/400 Hz and 2600 Hz) MODE SW: USB	POWER.M			CAR	TC1	Change alternately the frequency of AG to 400Hz and 2600 Hz to obtain the same output.	More than 1W	
	3) MODE SW: LSB MIC terminal: AG (2 mV/400 Hz and 2600 Hz)	POWER.M			CAR	TC4	Change alternately the frequency of AG to 400Hz and 2600 Hz to obtain the same output.	More than 1W	
5. ALC.M	1) MODE SW: USB SSB MIC VR: MAX ALC/RF SW: ALC MIC terminal: AG (2 mV/1500 Hz)	ALC.M			RF	VR4	Set to "10" on RF scale.		
		POWER.M						More than 10W	Check
	2) MODE SW: LSB	POWER. M						More than 10W	Check
	3) MODE SW: USB SSB MIC VR: 3 o'clock position BAND SW: 144 VFO dial: 000	ALC.M						ALC meter should deflect beyond ALC zone.	Check
6. Frequency setting	1) BAND SW: 145 MODE SW: CW VFO dial: 000.0	F. Count			PLL (A)	TC1	145.000.00 MHz	±30 Hz	
	2) MODE SW: FM	F. Count			CAR	TC3	145.000.00 MHz	±100 Hz	
	3) MODE SW: CW	F. Count	PLL (A)	TP1			Check frequency obtained.		Check
	4) SEND/REC SW: REC	F. Count	PLL (A)	TP1	AF VR	VR5	Set to frequency 800 Hz lower than "f" in Item 3).		

ADJUSTMENTS

TX SECTION (144/430M BAND)

Item	Conditions	Check point			Adjusting point			Standard	Remarks
		Testing Instruments	Unit	Terminal	Unit	Parts	Method		
7 DEV (145 MHz)	1) MIC terminal: AG (20 mV/1000 Hz) FM MIC VR: MAX SEND/REC SW: SEND	Linear detector			IF	VR6	Set to ±5.0 kHz		
	2) MIC terminal: AG (2 mV/1000 Hz)	Linear detector						Setting to ±3.5 kHz with FM MIC VR should be possible	Check
	3) MIC terminal: Remove AG SEND/REC SW: REC TONE SW: ON	Connect freq. counter to output terminal of linear detector			TONE	VR1	Set to 1750 Hz	±5 Hz	
		Linear detector						(1) More than 2.5 kHz (2) Transceiver should be set in transmit mode only when TONE SW is pressed	Check
8 DEV (433 MHz)	1) SEND/REC SW: REC MIC terminal: AG (20 mV/1000 Hz) 430 ANT terminal on rear panel POWER M								
	2) BAND SW: 433 VFO dial: 000 FM MIC VR: MAX SEND/REC SW: SEND	Linear detector						±4.0 kHz ~ ±6.0 kHz	Check
	3) IF U jumper connector: Change from "N" to "W"	Linear detector			IF	VR3	Set to ±7.5 kHz		
	4) IF U jumper connector: Change from "W" to "N"								
9 SSB	1) MODE SW: USB SSB MIC VR: MAX BAND SW: 430 VFO dial: 000 MIC terminal: AG (2 mV/1500 Hz)	POWER M						More than 10W	Check
	2) ALC/RF SW: ALC SSB MIC VR: 15 o'clock position.	ALC M						ALC meter shoulg deflect beyond ALC zone.	
10 Frequency setting	1) MODE SW: CW CAR VR: MAX BAND SW: 433 VFO dial: 000.0	F. Count			IF	L1	433.000.00 MHz	±100 Hz	
	2) BAND SW: 435	F. Count			IF	L64	435.000.00 MHz	±100 Hz	
11 Side tone	1) SEND/REC SW: REC AF GAIN VR: MIN SIDE TONE VR: MAX EXP. SP terminal on rear panel: Connect speaker KEY terminal on rear panel: Connect key	AF V.M						Side tone output of 0.7V is obtained by pressing key.	Check

ADJUSTMENTS

Item	Conditions	Check point			Adjusting point			Standard	Remarks
		Testing Instruments	Unit	Terminal	Unit	Parts	Method		
	2) SEND REC SW SEND	POWER M						Side tone output and transmit output are obtained by pressing key	Check
	3) SEND REC SW REC VOX MAN SW VOX DELAY VR MIN	POWER M						Side tone output and transmit output are obtained by pressing key Transceiver is set in receive mode by releasing key	Check

E. RX SECTION (144M BAND)

Item	Conditions	Check point			Adjusting point			Standard	Remarks
		Testing Instruments	Unit	Terminal	Unit	Parts	Method		
1 Setting	1) Rear panel POWER terminal: AC P S (220V) EXT SP terminal: Connect speaker								
2 S meter zero point	1) RF GAIN VR MAX BAND SW 145 VFO dial: 050	S M			RF	VR5	Set VR5 for S meter zero		
	2) RF GAIN VR MIN	S M						S meter deflects off scale.	Check
3 BPF	1) 144 ANT terminal on rear panel: Connect Sweep gen. MODE SW: FM RF GAIN VR: MAX PLL (A) U J3 connector: Remove RF U TP5 terminal: Connect detector	Oscillo-scope			RF	T16,17 L40	Adjust coil and trimmer for maximum gain and bandwidth	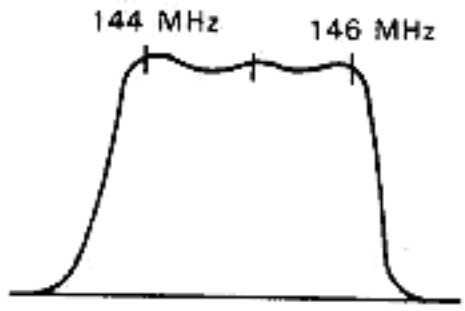	
4 Sensitivity adjustment	1) 144 ANT terminal on rear panel: SSG PLL (A) U J3 connector: Insert MODE SW: FM VFO dial: With 145.05 MHz signal applied from SSG, turn dial to receive signal and set S meter for maximum deflection.	DEV ..... ±5 kHz MOD ..... 1 kHz OUTPUT .... 10～20 dB							
	2) SSG OUTPUT: After receiving signal, reduce output as small as possible within the range of S meter deflection	S.M			RF	T10,11 T12,13 T14	MAX (repeat)		
	3) SSG OUTPUT: 20 dB (without modulation)	S.M			IF	VR8	Set to "9" on S meter scale.		

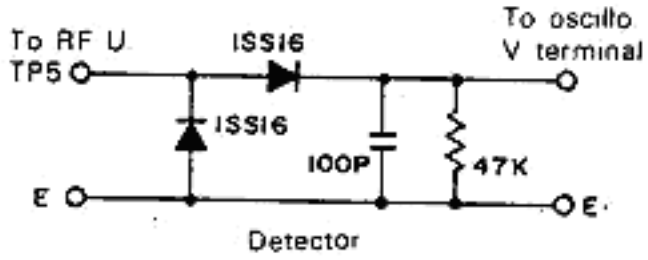

ADJUSTMENTS

RX SECTION (144M BAND)

Item	Conditions	Check point			Adjusting point			Standard	Remarks
		Testing Instruments	Unit	Terminal	Unit	Parts	Method		
5. C.M	1) SSG OUTPUT: 0 dB (with modulation) VFO dial: Set to optimum receive wave-form	AF V.M			IF	L53	MAX	Repeat Items 1) and 2)	
	2) SSG OUTPUT: OFF (no signal)	C.M			IF	L54	Set to "0"		
	3) SSG OUTPUT: 20 dB (without modulation) VFO dial: Shift freq. in plus direction.	C.M						Center meter deflects beyond "E" of the second letter in "CENTER"	Check
	4) VFO dial: Shift freq. in minus direction.	C.M						Center meter deflects beyond "E" of the fifth letter in "CENTER"	Check
6 Squelch	1) SSG OUTPUT: −6 dB (with modulation) VFO dial: Receive signal and set AF VTVM for maximum reading.								
	2) BAND SW: 144 SQUELCH VR: Adjust until squelch is closed.							Squelch VR is in 9 ~ 12 o'clock position when squelch is closed.	Check
	3) BAND SW: 145							Receive signal again	Check
7. FM sensitivity	1) SSG OUTPUT: 0 dB BAND SW: 145, VFO dial: 050 BAND SW: 144, VFO dial: 050 BAND SW: 145, VFO dial: 950						Receive signals at each point at left and measure sensitivity.	More than 26 dB	Check
8 SSB sensitivity adjustment	1) MODE SW: USB BAND SW: 145 VFO dial: 050 Apply 145.05 MHz, 10 dB signal from SSG and	S.M			RF	T15	MAX (repeat)		
					IF	L28,29 L30,31 L32,38 L40			
9. S.M	1) SSG OUTPUT: −3 dB VFO dial: Set S meter for maximum reading.	S.M			IF	L38	Set the S meter for one division of the scale by turning the core counterclockwise direction		
	2) SSG OUTPUT: 20 dB	S.M			RF	VR6	Set S meter for "9"		
10. N8	1) Continued from the previous Item	DCV.M	IF	TP8	IF	L35,36	MIN (repeat)		

ADJUSTMENTS

F. RX SECTION (430M BAND)

<table>
<tr><th rowspan="2">Item</th><th rowspan="2">Conditions</th><th colspan="3">Check point</th><th colspan="3">Adjusting point</th><th rowspan="2">Standard</th><th rowspan="2">Remarks</th></tr>
<tr><th>Testing Instruments</th><th>Unit</th><th>Terminal</th><th>Unit</th><th>Parts</th><th>Method</th></tr>
<tr><td>1. Setting</td><td>1) Rear panel
POWER Terminal:
AC P.S (220V)
430 ANT terminal:
Connect Sweep gen.
EXT. SP terminal:
Connect speaker</td><td></td><td></td><td></td><td></td><td></td><td></td><td></td><td></td></tr>
<tr><td>2. BPF</td><td>1) MODE SW: FM
BAND SW: 430
PLL (A) U J3
Connector: Remove
RF U TP2 terminal:
Connect detector</td><td>Oscillo-scope
 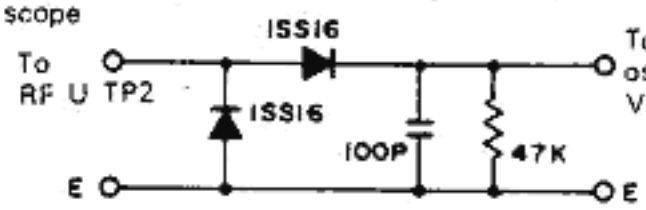 </td><td></td><td></td><td>RF</td><td>L30.33</td><td>Adjust coil and trimmer for maximum gain and bandwidth</td><td> 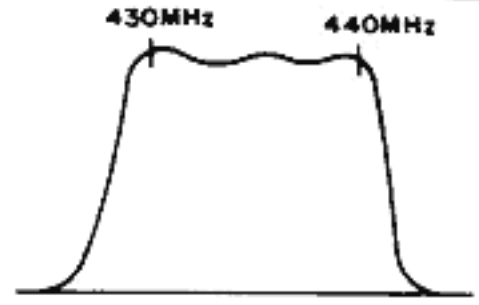 </td><td></td></tr>
<tr><td>3. FM sensitivity</td><td>1) MODE SW: FM
430 ANT terminal on rear panel
SSG ——— DEV ..... ±5 kHz
MOD ..... 1 kHz
OUTPUT .. 0 dB</td><td></td><td></td><td></td><td></td><td></td><td></td><td></td><td></td></tr>
<tr><td></td><td>2) BAND SW / VFO dial
433 / 050
430 / 050
439 / 950</td><td></td><td></td><td></td><td></td><td></td><td>Receive signals at each point at left and measure sensitivity</td><td>More than 26 dB</td><td>Check</td></tr>
<tr><td>4. SSB sensitivity</td><td>1) SSG OUTPUT
20 dB (without modulation)
MODE SW: USB
BAND SW: 433
VFO dial: 050</td><td>S M</td><td></td><td></td><td></td><td></td><td>Receive signal and set S meter for maximum reading.
Adjust SSG output so that S meter reads S "9"</td><td>SSG output for S "9"
20 dB + 8 dB
− 10 dB
(10 dB ~ 28 dB)</td><td>Check</td></tr>
<tr><td></td><td>2) SSG OUTPUT
− 6 dB
BAND SW / VFO dial
433 / 050
430 / 050
439 / 950</td><td></td><td></td><td></td><td></td><td></td><td>Receive signals at each point at left and measure sensitivity</td><td>More than 10 dB</td><td>Check</td></tr>
</table>

3. OPERATION CHECK OF MICRO COMPUTER SECTION

Item	Conditions	Check point			Adjusting point			Standard	Remarks
		Testing Instruments	Unit	Terminal	Unit	Parts	Method		
1. Reset	1) Rear panel POWER terminal: DC P.S (13.8V) MEMORY B.U SW: OFF								
	2) AF/VOX.U BZ connector: ON DISP connector: All indicate								
	3) Reset lug terminal (see figure at right) ① terminal: Connect digital voltmeter. ⑤ terminal: Connect oscilloscope.						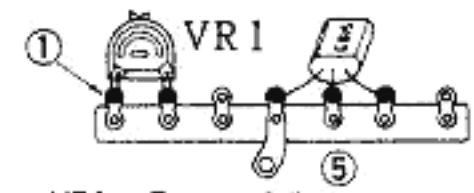 VR1 Turn to full clockwise direction		Input selector on oscilloscope: DC
	4) POWER SW: ON Adjust DC power voltage to obtain 3.70 V reading on digital voltmeter.	Oscilloscope	Reset lug terminal	⑤ terminal	Reset lug terminal	VR1	Set VR1 to obtain 0V on oscilloscope.		
	5) Adjust DC power voltage to increase oscilloscope voltage.	Oscilloscope	Reset lug terminal	⑤' terminal					
	6) Adjust DC power voltage for 0V on oscilloscope and check the reading of digital voltmeter.	Oscilloscope	Reset lug terminal	⑤ terminal				Reading of digital voltmeter at 0V of oscilloscope voltage: 3.70V ± 0.01V	Check
	7) POWER SW: OFF ① terminal: Remove digital voltmeter. ⑤ terminal: Remove oscilloscope.								
	8) Set DC power voltage to 13.8V								
2. DISP SW	1) POWER SW: ON MODE SW: FM,LSB,USB, CW	DISPLAY						(A 144.000 0) is displayed in all mode	
	2) AF/VOX.U DISP SW: NORM MODE SW: CW, LSB, USB	DISPLAY						(A 144.000 0) is displayed.	
	3) MODE SW: FM	DISPLAY						(A 144.000.0) is displayed.	
3. VFOSW	1) MODE SW: USB VFO dial: Counterclockwise	DISPLAY						(A 144.000.0) remains unchanged	
	2) VFO SW: CIR VFO dial: Turn to counter-clockwise direction	DISPLAY						(A 144.999.9) is displayed.	

ADJUSTMENTS/CHECK

Item	Conditions	Check point				Adjusting point		Standard	Remarks
		Testing Instruments	Unit	Terminal	Unit	Parts	Method		
4. Digit UP	1) VFO dial: Slowly turn clockwise.	DISPLAY						(1) Each digit changes normally: 0→1→2→3→4 · 8→9 (2) Frequency changes by 10 kHz at each turn of VFO dial	
5. F. LOCK	1) F.LOCK SW: ON VFO dial: Turn clockwise and counterclockwise.	DISPLAY						Display remains unchanged.	
	2) F.LOCK SW: OFF								
6. S/F SW	1) VFO dial: 00 S/F SW: ON (FAST)	DISPLAY						(A 144.01) is displayed.	
	2) MODE SW: USB VFO dial: Slowly turn clockwise.	DISPLAY						(1) Digits of 100 kHz changes as follows: 0→2→4→6→8→0. (2) Frequency changes by 100 kHz at each turn of VFO dial.	
	3) S/F SW: OFF (SLOW)								
7. BAND SW	1) BAND SW (UP): Press intermittently	DISPLAY						(1) Digits of MHz counts up as follows 144→145→430 · 431→432→433 · 434→435→436 · 437→438→439 · (2) Buzzer sounds each time freq. is changed.	
	2) BAND SW (DOWN): Press intermittently.	DISPLAY						Digits of MHz counts down in 1 MHz steps reversing the preceding Item 1)	
	3) BAND SW (UP): Press and hold	DISPLAY						Digits of MHz counts up in 1 MHz steps automatically each time buzzer sounds	
	4) BAND SW (DOWN): Press and hold	DISPLAY						Digits of MHz counts down in 1 MHz steps automatically each time buzzer sounds	
	5) BAND SW: Press UP and DOWN at the same time	DISPLAY						Same as when UP is pressed	UP takes precedence
8. BZ SW	1) AF/VOX.U BZ SW: OFF BAND SW (UP): Press and hold							Digits of MHz change but buzzer will not sound	
	2) AF/VOX.U BZ SW: ON								
9. SCAN	1) MODE SW: FM SCAN SW: ON	DISPLAY						Frequency counts up in 5 kHz steps.	
	2) S/F SW: ON (FAST)	DISPLAY						Frequency counts up in 20 kHz steps. not in 5 kHz steps.	

http://www.qsl.net/pe3hmp

ADJUSTMENTS/CHECK

OPERATION CHECK OF MICRO COMPUTER SECTION

Item	Conditions	Check point			Adjusting point			Standard	Remarks
		Testing Instruments	Unit	Terminal	Unit	Parts	Method		
	3) S/F SW: OFF (SLOW)								
	4) SCAN SW: OFF								
10. MEMORY	1) BAND SW: 145 VFO dial: 000.0 (FUNCTION SW: A)	DISPLAY						(A 145 000.0) is displayed	
	2) FUNCTION SW: B	DISPLAY						(b 144 000.0) is displayed	
	3) FUNCTION SW: FIX	DISPALY						(1) is displayed	
	4) FUNCTION SW: A MEMORY SW: ON								
	5) FUNCTION SW: FIX	DISPLAY						(1 145 000.0) is displayed	
	6) BAND SW: Press UP and DOWN	DISPLAY						Display in Item 5) remains unchanged	
11. FIX CH	1) FIX CH SW: Press intermittently	DISPLAY						(1) Display changes as follows 1 145.000.0 ↓ 2 . . ↓ 3 . . ↓ 4 . . ↓ 5 . . ↓ 6 . . ↓ 7 . . ↓ 8 . . ↓ 1 145.000.0 (2) Buzzer sounds at change of channel	
	2) FIX CH SW: Press and hold	DISPLAY						Channel changes automatically each time buzzer sounds	
	3) MODE SW: FM SCAN SW: ON	DISPLAY						Same as Item 2), but buzzer will not sound.	
	4) SCAN SW: OFF								
12. MEMORY B.U	1) MODE SW: USB FUNCTION SW: A POWER SW: OFF								
	2) POWER SW: ON (MEMORY B.U SW: OFF)	DISPLAY						(A 144.000 0) is displayed	
	3) MEMORY B.U SW: ON BAND SW: 145								

Item	Conditions	Check point			Adjusting point			Standard	Remarks
		Testing Instruments	Unit	Terminal	Unit	Parts	Method		
	4) POWER SW: OFF 5) POWER SW: ON	DISPLAY						(A 145 000 0) is displayed	
13 FUNCTION	1) FUNCTION SW: A-B	DISPLAY						(A 145 000 0) is displayed	
	2) SEND/REC SW: SEND	DISPLAY						(b 144 000 0) is displayed	
	3) SEND/REC SW: REC FUNCTION SW: B-A	DISPLAY						(b 144 000 0) is displayed	
	4) SEND/REC SW: SEND	DISPLAY						(A 145 000 0) is displayed	
	5) SEND/REC SW: REC								
14 SEARCH	1) SEARCH SW: ON	DISPLAY						Display counts up repeatedly from 144 000 0 to 144 100 0	
	2) SCAN SW: ON	DISPLAY						Operation in item 1) is repeated	SEARCH takes precedence.
	3) F. LOCK SW: ON	DISPLAY						Operation in item 1) is repeated	SEARCH takes precedence.
	4) SEARCH SW: OFF	DISPLAY						Scanning (UP scan in 5 kHz steps)	SCAN takes precedence.
	5) SCAN SW: OFF POWER SW: OFF								

http://www.qsl.net/pe3hmp

ADJUSTMENTS/CHECK

H. OPERATION CHECK OF ENCODER ASSEMBLY

Item	Conditions	Check point			Adjusting point			Standard	Remarks
		Testing Instruments	Unit	Terminal	Unit	Parts	Method		
1 Setting	1) POWER terminal on rear panel: AC 220V Use motor instead of VFO knob	Oscillos-scope	Digital	J5-V1			Set the sweep knob of oscilloscope to 0.2 msec/DIV. Set motor speed for 8 div. between "a" and "b".	Motor speed- 300 rpm 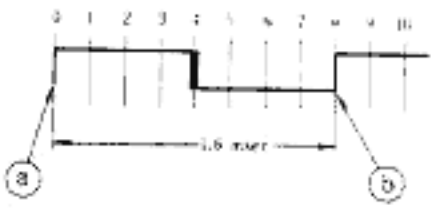 When checking the duty ratio without using the moter, turn the VFO knob by hand.	
2. V1 duty ratio	1) Set sweep knob of oscilloscope to 0.1 msec/DIV	Oscillo-scope	Digital	J5-V1			Set the variable knob of oscilloscope to 9 div.		
	2)				Encoder	VR3	Set the position "c" to 4.5 div.	4.5 div ±0.5 div 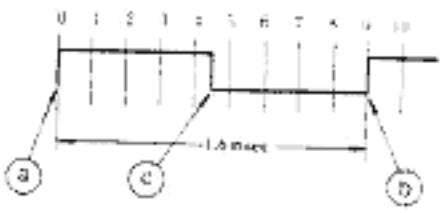	
3 V3 duty ratio	1) Continued from Item 1)	Oscillo-scope	Digital	J5-V3	Encoder	VR2	Set the position "c" to 4.5 div.	4.5 div ±1.5 div	
4 V1 - V3 phase difference	1) Set the sweep knob of oscilloscope to 50 μsec/DIV. Do not touch variable knob.	Oscillo-scope	Digital	J5-V1 J5-V3				V1 – V3 phase difference: 4.5 div. ±1 div. Check 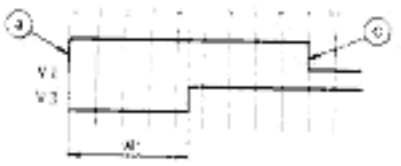	

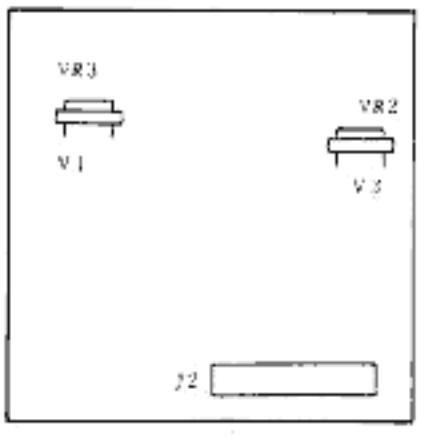

Pulse generator unit

ADJUSTMENTS

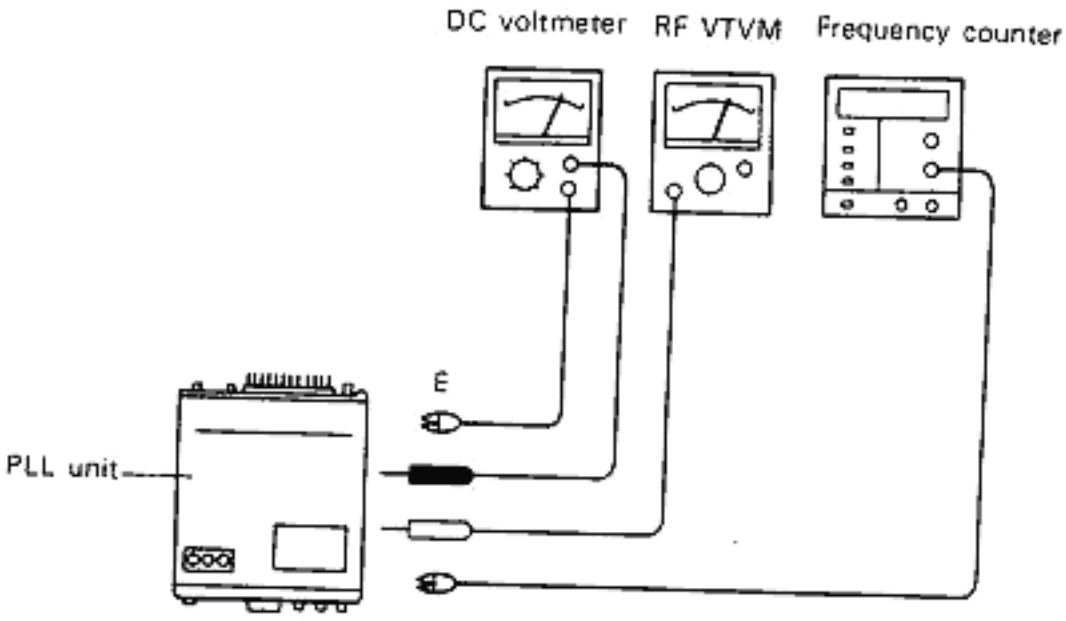

Fig. 1 Adjustment of PLL unit

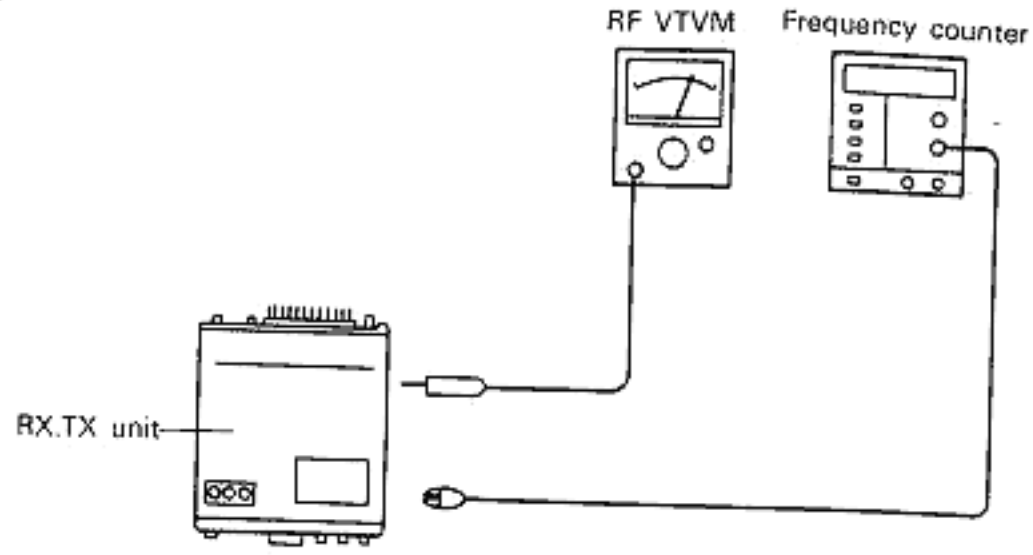

Fig. 4 Adjustment of 10.7 MHz and drive

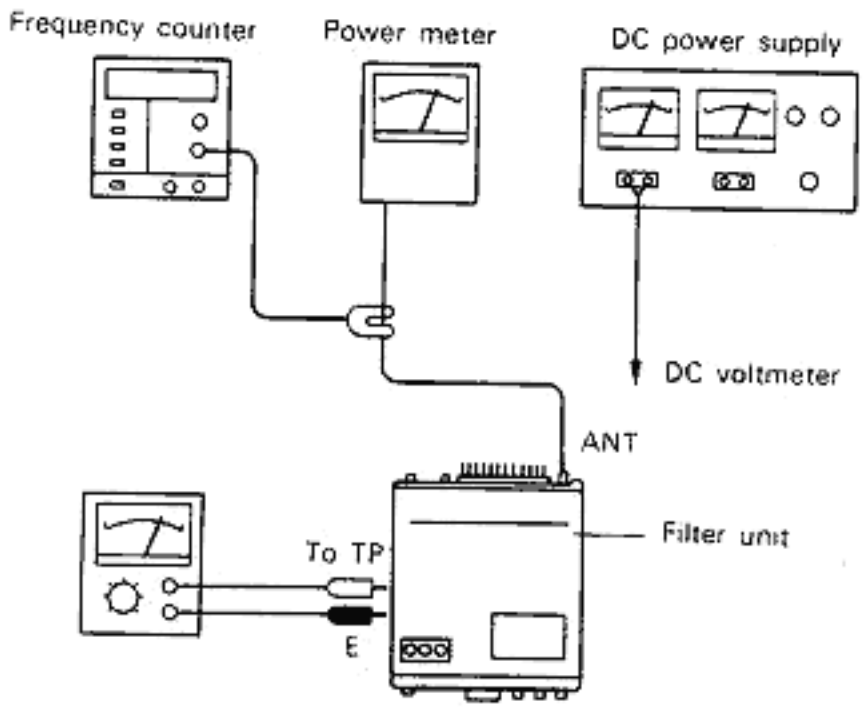

Fig. 2 Adjustment of PA unit and check of TX frequency

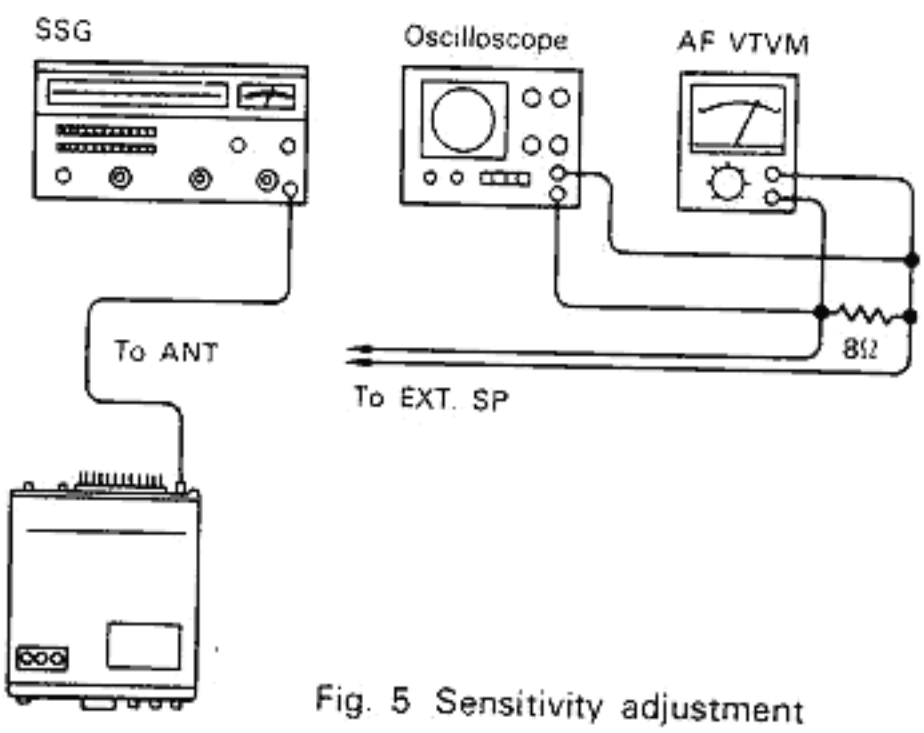

Fig. 5 Sensitivity adjustment

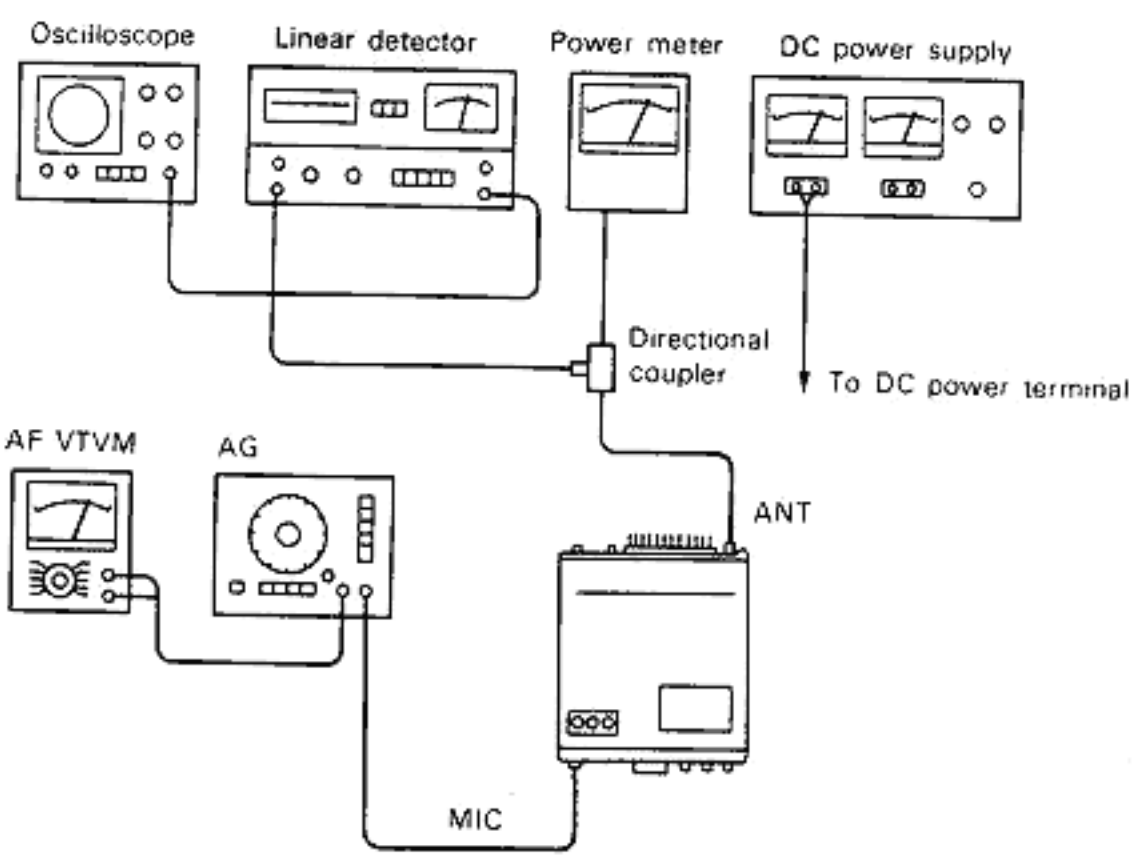

Fig. 3 Deviation adjustment

[Receiver Section]

The figures shown are signal generator output requered for a constant audio output with a constant AF gain control setting. Set the AF gain control for 0.63V/8Ω(50 mW) audio output at −6 dB (0.5 μV) signal generator input at 145.05 MHz. (USB Mode)

[Transmitting Portion]

1. The portion which is not designated is 145,05 MHz, Mode USB
   MIC terminal input: 3 mV, 1.5 kHz
   MIC gain: CENTERED

RECEIVER SECTION

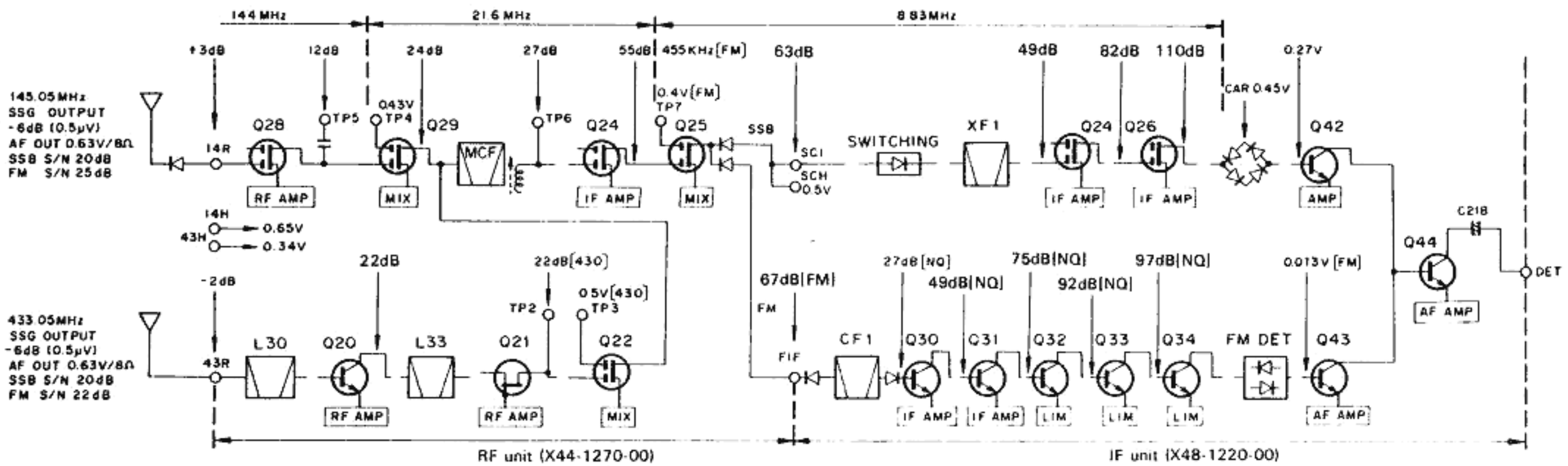

TRANSMITTED SECTION

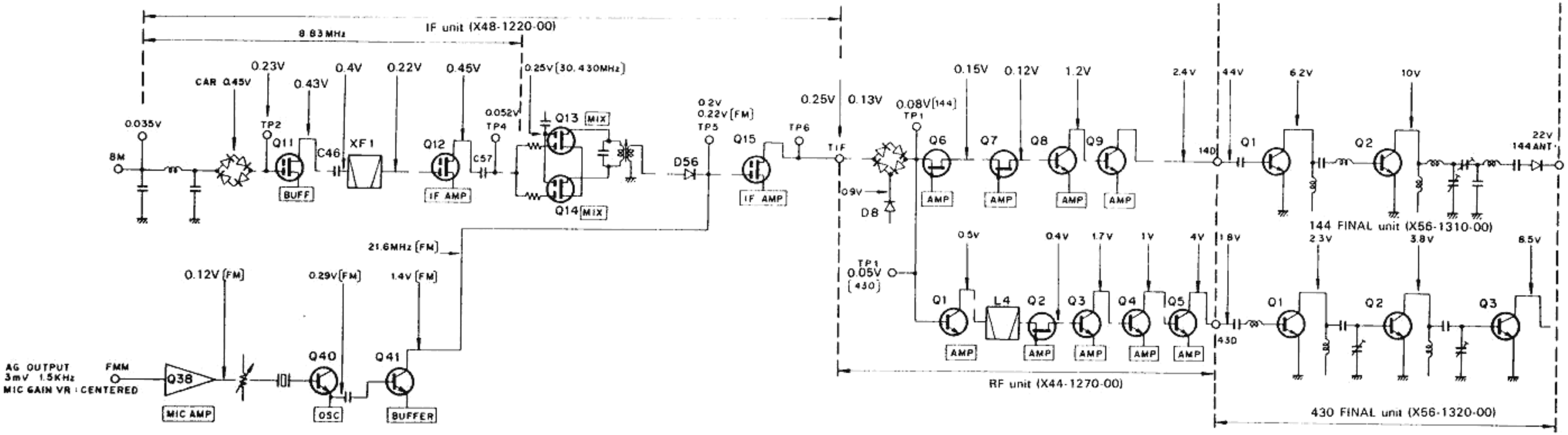

ADJUSTMENTS

TOP INTERNAL VIEW

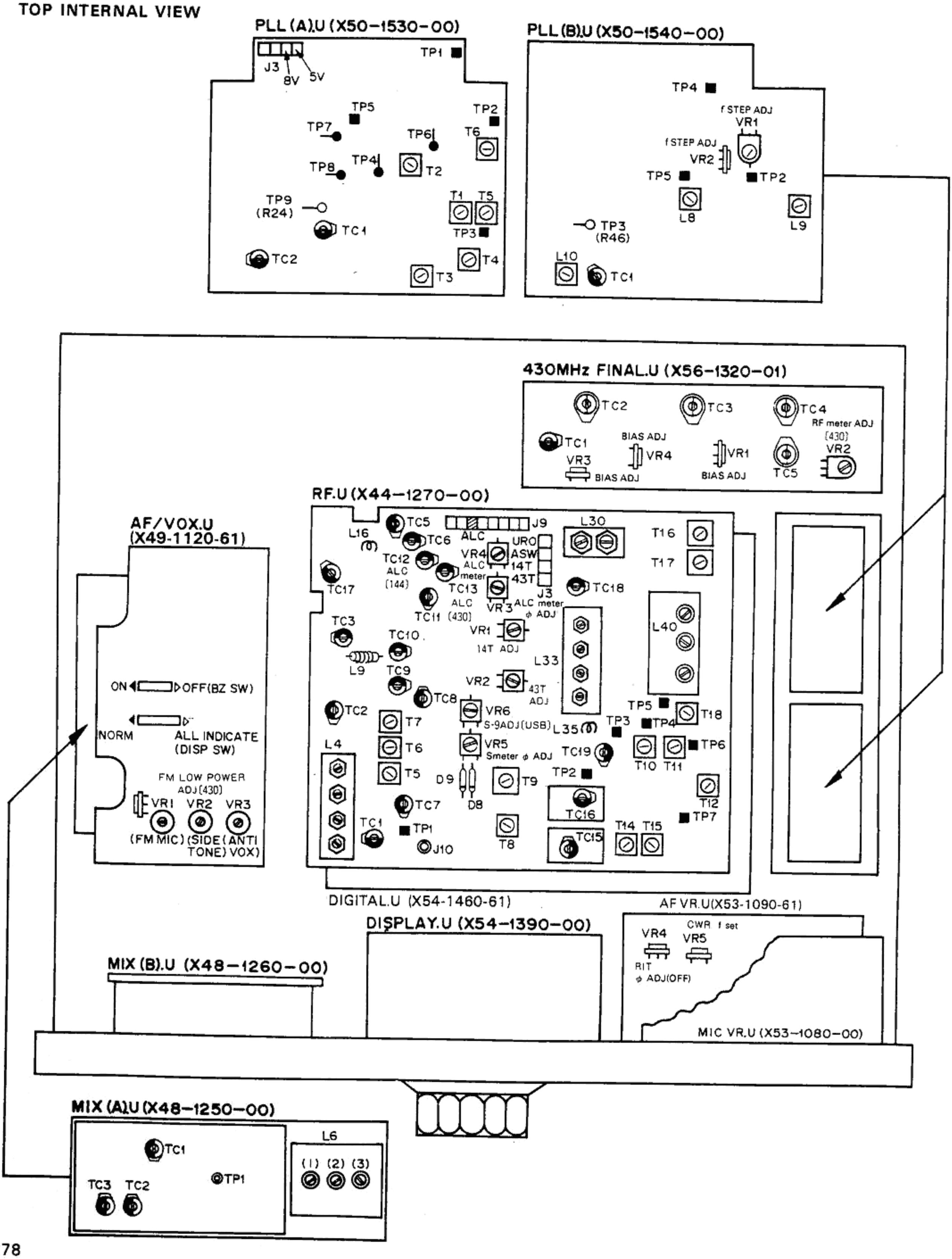

ADJUSTMENTS

BOTTOM INTERNAL VIEW

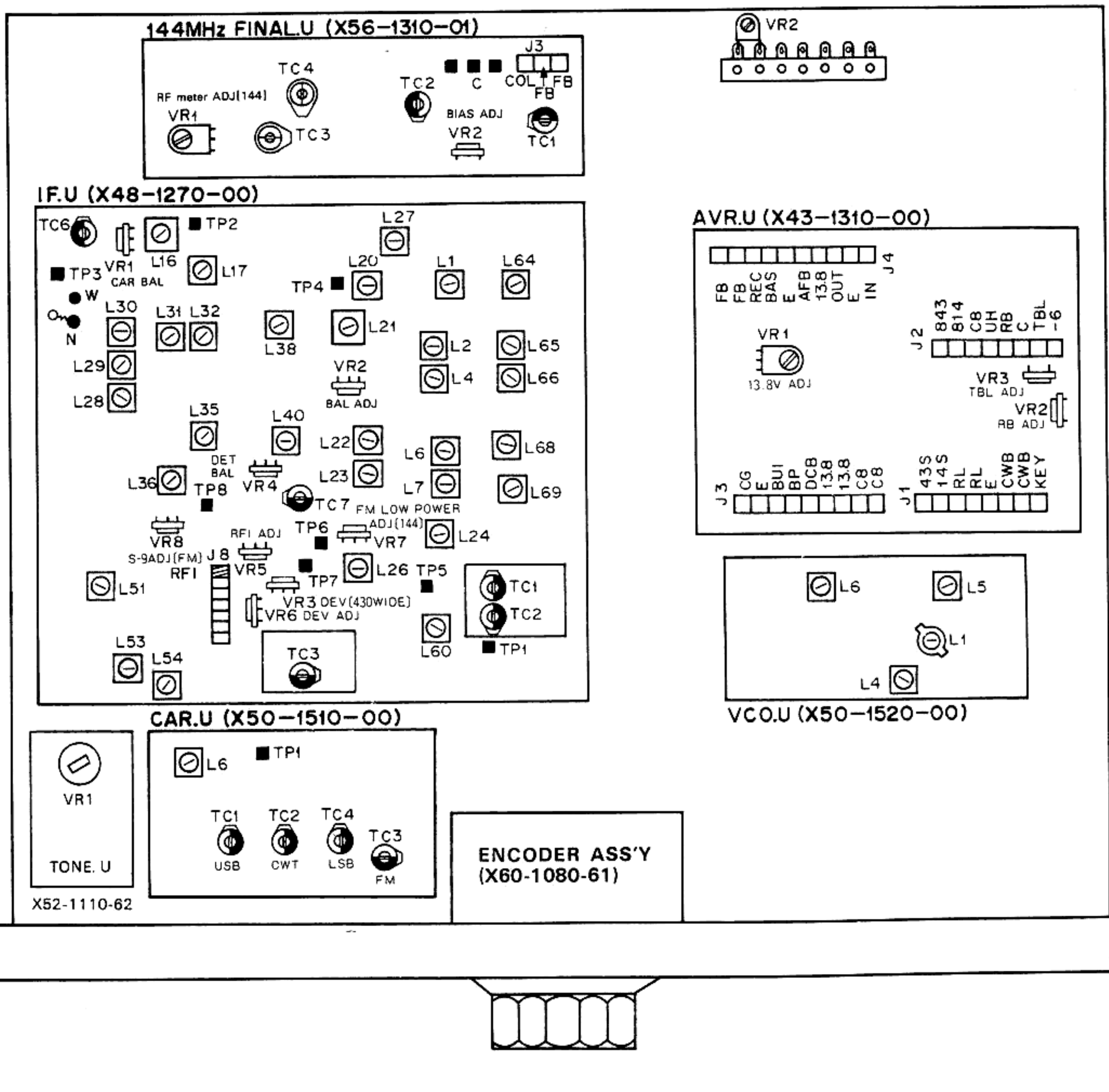

CIRCUIT DIAGRAM

RF Unit (X44-1270-00)

Q2,6,7,10,21	: 2SK125
Q3.8	: 2SC2407
Q4.5	: MRF629
Q9	: 2SC741
Q11	: 2SC387A
Q12,15,41	: 2SD235
Q13,14,16~18,23 30,31,33,34,39,40	: 2SC1815(Y)
Q19	: 2SA562(Y)
Q1,20	: 2SC2549
Q22	: 3SK92 or 3SK76
Q24,25	: 3SK74(L)
Q26,36,38	: 2SA1015(Y)
Q27	: 2SC460(B)
Q28,29	: 3SK40(L)
Q32	: 2SC735(Y)
Q35,37	: 2SK19(GR)
Q42	: 2SC496(Y)
D1,45~47	: 1SS97
D2,3,8,9	: 1S2588
D4~7,25	: 1N60
D12,23,24,35~37	: 1S1587
D15,18,26,27,29~31 41,42,44,49	: 1SS55
D16,19,32	: XZ060
D20	: XZ132
D28	: XZ117
D40,43	: MU13

CIRCUIT DIAGRAM

IF Unit (X48-1270-00)

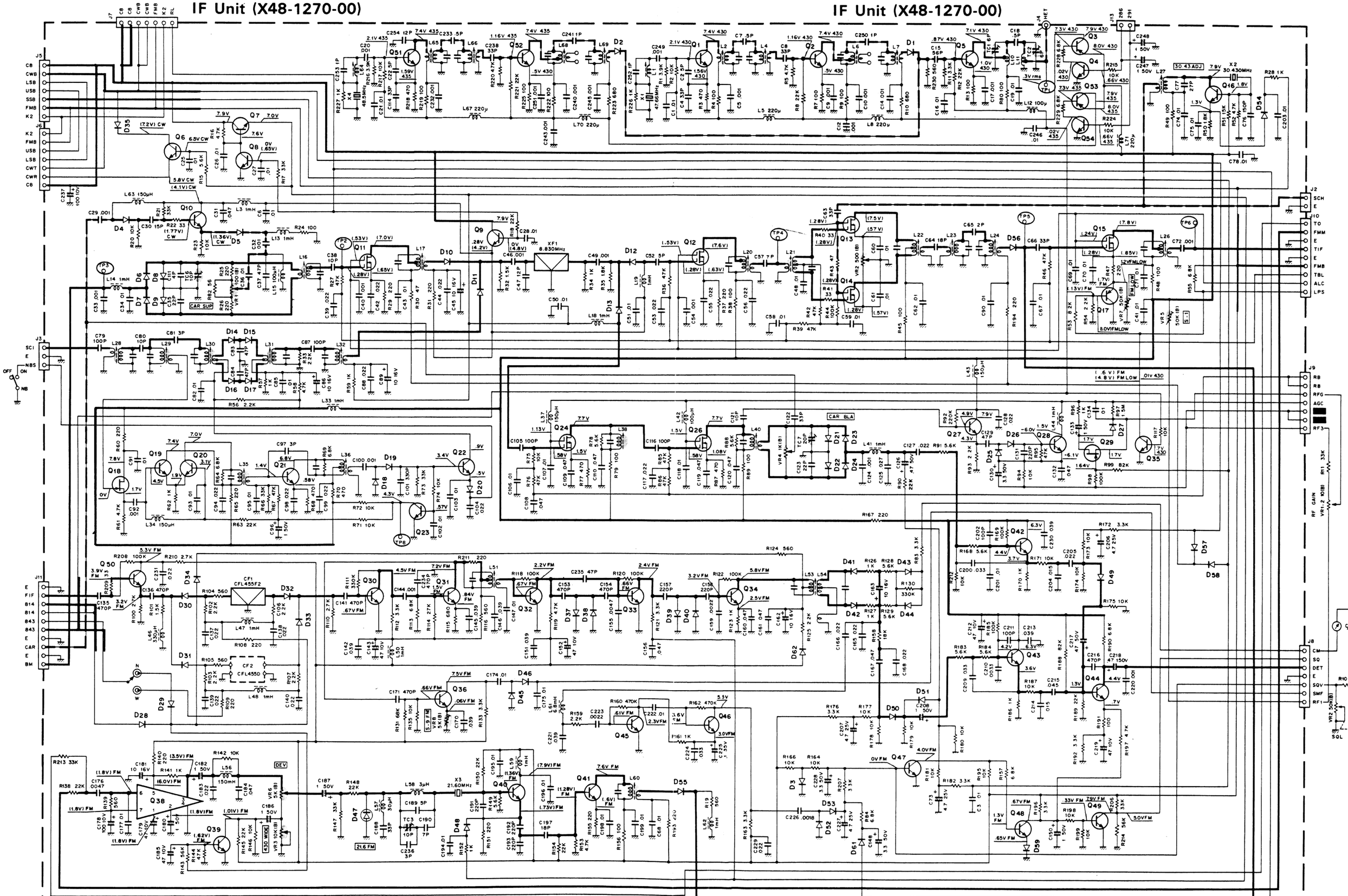
J7 C8 C8 CWB CWB FMB K2 RL
J5 C8 CWB LSB USB SSB FMB K2
J6 K2 FMB USB LSB CWT CWR C8
J3 SCI E NBS
OFF ON NB
J2 SCH E IO TO FMM E TIF E FMB TBL ALC LPS
J9 RB RB RFG AGC RF3
J8 CM SQ DET E SQV SMF RF1
J11 E FIF 814 814 843 843 E CAR E BM
J4 MET
J13 286 291
Q1 Q2 Q3 Q4 Q5 Q6 Q7 Q8 Q9 Q10 Q11 Q12 Q13 Q14 Q15 Q16 Q17 Q18 Q19 Q20 Q21 Q22 Q23 Q24 Q26 Q27 Q28 Q29 Q30 Q31 Q32 Q33 Q34 Q35 Q36 Q37 Q38 Q39 Q40 Q41 Q42 Q43 Q44 Q45 Q46 Q47 Q48 Q49 Q50 Q51 Q53 Q54
D1 D2 D4 D5 D6 D7 D8 D9 D10 D11 D12 D13 D14 D15 D16 D17 D18 D19 D20 D21 D22 D23 D24 D25 D26 D27 D28 D29 D30 D31 D32 D33 D34 D35 D36 D37 D38 D39 D40 D41 D42 D43 D44 D45 D46 D47 D48 D49 D50 D51 D52 D53 D54 D55 D56 D57 D58 D59 D62
XF1 8.830MHz
X1 48.5MHz
X2 30.430MHz
X3 21.60MHz
CF1 CFL455F2
CF2 CFL455D
TP1 TP2 TP3 TP4 TP5 TP6 TP7 TP8
VR1 VR2 VR3 VR4 VR5 VR6 VR7 VR8
L1 L2 L4 L5 L6 L7 L8 L10 L11 L12 L13 L14 L15 L16 L17 L18 L19 L20 L21 L22 L23 L24 L26 L27 L28 L29 L30 L31 L32 L33 L34 L35 L36 L37 L38 L40 L41 L42 L43 L44 L45 L46 L47 L48 L50 L51 L53 L54 L56 L58 L59 L60 L61 L62
R1 R2 R3 R4 R5 R6 R7 R8 R9 R10 R11 R12 R13 R14 R15 R16 R17 R18 R19 R20 R21 R22 R23 R24 R25 R26 R27 R28 R29 R30 R31 R32 R33 R34 R35 R36 R37 R38 R39 R40 R41 R42 R43 R44 R45 R46 R47 R48 R49 R50 R51 R52 R53 R54 R55 R56 R57 R58 R59 R60 R61 R62 R63 R64 R65 R66 R67 R68 R69 R71 R72 R73 R74 R75 R76 R77 R78 R79 R80 R82 R83 R85 R86 R87 R88 R89 R90 R91 R92 R93 R94 R95 R96 R97 R98 R99 R100 R101 R102 R103 R104 R105 R106 R107 R108 R109 R110 R111 R112 R113 R114 R115 R116 R117 R118 R119 R120 R121 R122 R123 R124 R125 R126 R127 R128 R129 R130 R131 R132 R133 R134 R135 R136 R137 R138 R139 R140 R141 R142 R143 R144 R145 R146 R147 R148 R149 R150 R151 R152 R153 R154 R155 R156 R157 R158 R159 R160 R161 R162 R163 R164 R165 R166 R167 R168 R169 R170 R171 R172 R173 R174 R175 R176 R177 R178 R179 R180 R181 R182 R183 R184 R185 R186 R187 R188 R189 R190 R191 R192 R193 R194 R195 R196 R197 R198 R199 R200 R201 R202 R203 R204 R205 R206 R207 R208 R209 R210 R211 R212 R213 R214 R215 R217 R218 R219 R220 R221 R222 R223 R224 R225 R226 R227 R228 R229 R230 R231 R232 R233 R234 R235 R236 R237 R238 R239 R240 R241 R242 R243 R244 R245 R246 R247 R248 R249 R250 R251 R252 R253 R254 R255 R256 R257 R258 R259 R260 R261 R262 R263 R264 R265 R266 R267 R268 R269 R270 R271 R272 R273 R274 R275 R276 R277 R278 R279 R280 R281 R282 R283 R284 R285 R286 R287 R288 R289 R290 R291 R292 R293 R294 R295 R296 R297 R298 R299 R300 R301 R302 R303 R304 R305 R306 R307 R308 R309 R310 R311 R312 R313 R314 R315 R316 R317 R318 R319 R320 R321 R322 R323 R324 R325 R326 R327 R328 R329 R330 R331 R332 R333 R334 R335 R336 R337 R338 R339 R340 R341 R342 R343 R344 R345 R346 R347 R348 R349 R350 R351 R352 R353 R354 R355 R356 R357 R358 R359 R360 R361 R362 R363 R364 R365 R366 R367 R368 R369 R370 R371 R372 R373 R374 R375 R376 R377 R378 R379 R380 R381 R382 R383 R384 R385 R386 R387 R388 R389 R390 R391 R392 R393 R394 R395 R396 R397 R398 R399 R400 R401 R402 R403 R404 R405 R406 R407 R408 R409 R410 R411 R412 R413 R414 R415 R416 R417 R418 R419 R420 R421 R422 R423 R424 R425 R426 R427 R428 R429 R430 R431 R432 R433 R434 R435 R436 R437 R438 R439 R440 R441 R442 R443 R444 R445 R446 R447 R448 R449 R450 R451 R452 R453 R454 R455 R456 R457 R458 R459 R460 R461 R462 R463 R464 R465 R466 R467 R468 R469 R470 R471 R472 R473 R474 R475 R476 R477 R478 R479 R480 R481 R482 R483 R484 R485 R486 R487 R488 R489 R490 R491 R492 R493 R494 R495 R496 R497 R498 R499 R500 R501 R502 R503 R504 R505 R506 R507 R508 R509 R510 R511 R512 R513 R514 R515 R516 R517 R518 R519 R520 R521 R522 R523 R524 R525 R526 R527 R528 R529 R530 R531 R532 R533 R534 R535 R536 R537 R538 R539 R540 R541 R542 R543 R544 R545 R546 R547 R548 R549 R550 R551 R552 R553 R554 R555 R556 R557 R558 R559 R560 R561 R562 R563 R564 R565 R566 R567 R568 R569 R570 R571 R572 R573 R574 R575 R576 R577 R578 R579 R580 R581 R582 R583 R584 R585 R586 R587 R588 R589 R590 R591 R592 R593 R594 R595 R596 R597 R598 R599 R600 R601 R602 R603 R604 R605 R606 R607 R608 R609 R610 R611 R612 R613 R614 R615 R616 R617 R618 R619 R620 R621 R622 R623 R624 R625 R626 R627 R628 R629 R630 R631 R632 R633 R634 R635 R636 R637 R638 R639 R640 R641 R642 R643 R644 R645 R646 R647 R648 R649 R650 R651 R652 R653 R654 R655 R656 R657 R658 R659 R660 R661 R662 R663 R664 R665 R666 R667 R668 R669 R670 R671 R672 R673 R674 R675 R676 R677 R678 R679 R680 R681 R682 R683 R684 R685 R686 R687 R688 R689 R690 R691 R692 R693 R694 R695 R696 R697 R698 R699 R700 R701 R702 R703 R704 R705 R706 R707 R708 R709 R710 R711 R712 R713 R714 R715 R716 R717 R718 R719 R720 R721 R722 R723 R724 R725 R726 R727 R728 R729 R730 R731 R732 R733 R734 R735 R736 R737 R738 R739 R740 R741 R742 R743 R744 R745 R746 R747 R748 R749 R750 R751 R752 R753 R754 R755 R756 R757 R758 R759 R760 R761 R762 R763 R764 R765 R766 R767 R768 R769 R770 R771 R772 R773 R774 R775 R776 R777 R778 R779 R780 R781 R782 R783 R784 R785 R786 R787 R788 R789 R790 R791 R792 R793 R794 R795 R796 R797 R798 R799 R800 R801 R802 R803 R804 R805 R806 R807 R808 R809 R810 R811 R812 R813 R814 R815 R816 R817 R818 R819 R820 R821 R822 R823 R824 R825 R826 R827 R828 R829 R830 R831 R832 R833 R834 R835 R836 R837 R838 R839 R840 R841 R842 R843 R844 R845 R846 R847 R848 R849 R850 R851 R852 R853 R854 R855 R856 R857 R858 R859 R860 R861 R862 R863 R864 R865 R866 R867 R868 R869 R870 R871 R872 R873 R874 R875 R876 R877 R878 R879 R880 R881 R882 R883 R884 R885 R886 R887 R888 R889 R890 R891 R892 R893 R894 R895 R896 R897 R898 R899 R900 R901 R902 R903 R904 R905 R906 R907 R908 R909 R910 R911 R912 R913 R914 R915 R916 R917 R918 R919 R920 R921 R922 R923 R924 R925 R926 R927 R928 R929 R930 R931 R932 R933 R934 R935 R936 R937 R938 R939 R940 R941 R942 R943 R944 R945 R946 R947 R948 R949 R950 R951 R952 R953 R954 R955 R956 R957 R958 R959 R960 R961 R962 R963 R964 R965 R966 R967 R968 R969 R970 R971 R972 R973 R974 R975 R976 R977 R978 R979 R980 R981 R982 R983 R984 R985 R986 R987 R988 R989 R990 R991 R992 R993 R994 R995 R996 R997 R998 R999 R1000
C1 C2 C3 C4 C5 C6 C7 C8 C9 C10 C11 C12 C13 C14 C15 C16 C17 C18 C19 C20 C21 C22 C23 C24 C25 C26 C27 C28 C29 C30 C31 C32 C33 C34 C35 C36 C37 C38 C39 C40 C41 C42 C43 C44 C45 C46 C47 C48 C49 C50 C51 C52 C53 C54 C55 C56 C57 C58 C59 C60 C61 C62 C63 C64 C65 C66 C67 C68 C69 C70 C71 C72 C73 C74 C75 C76 C77 C78 C79 C80 C81 C82 C83 C84 C85 C86 C87 C88 C89 C90 C91 C92 C93 C94 C95 C96 C97 C98 C99 C100 C101 C102 C103 C104 C105 C106 C107 C108 C109 C110 C111 C112 C113 C114 C115 C116 C117 C118 C119 C120 C121 C122 C123 C124 C125 C126 C127 C128 C129 C130 C131 C132 C133 C134 C135 C136 C137 C138 C139 C140 C141 C142 C143 C144 C145 C146 C147 C148 C149 C150 C151 C152 C153 C154 C155 C156 C157 C158 C159 C160 C161 C162 C163 C164 C165 C166 C167 C168 C169 C170 C171 C172 C173 C174 C175 C176 C177 C178 C179 C180 C181 C182 C183 C184 C185 C186 C187 C188 C189 C190 C191 C192 C193 C194 C195 C196 C197 C198 C199 C200 C201 C202 C203 C204 C205 C206 C207 C208 C209 C210 C211 C212 C213 C214 C215 C216 C217 C218 C219 C220 C221 C222 C223 C224 C225 C226 C227 C228 C229 C230 C231 C232 C233 C234 C235 C236 C237 C238 C239 C240 C241 C242 C243 C244 C245 C246 C247 C248 C249 C250 C251 C252 C253 C254 C255 C256 C257 C258 C259 C260 C261 C262 C263 C264 C265 C266 C267 C268 C269 C270 C271 C272 C273 C274 C275 C276 C277 C278 C279 C280 C281 C282 C283 C284 C285 C286 C287 C288 C289 C290 C291 C292 C293 C294 C295 C296 C297 C298 C299 C300 C301 C302 C303 C304 C305 C306 C307 C308 C309 C310 C311 C312 C313 C314 C315 C316 C317 C318 C319 C320 C321 C322 C323 C324 C325 C326 C327 C328 C329 C330 C331 C332 C333 C334 C335 C336 C337 C338 C339 C340 C341 C342 C343 C344 C345 C346 C347 C348 C349 C350 C351 C352 C353 C354 C355 C356 C357 C358 C359 C360 C361 C362 C363 C364 C365 C366 C367 C368 C369 C370 C371 C372 C373 C374 C375 C376 C377 C378 C379 C380 C381 C382 C383 C384 C385 C386 C387 C388 C389 C390 C391 C392 C393 C394 C395 C396 C397 C398 C399 C400 C401 C402 C403 C404 C405 C406 C407 C408 C409 C410 C411 C412 C413 C414 C415 C416 C417 C418 C419 C420 C421 C422 C423 C424 C425 C426 C427 C428 C429 C430 C431 C432 C433 C434 C435 C436 C437 C438 C439 C440 C441 C442 C443 C444 C445 C446 C447 C448 C449 C450 C451 C452 C453 C454 C455 C456 C457 C458 C459 C460 C461 C462 C463 C464 C465 C466 C467 C468 C469 C470 C471 C472 C473 C474 C475 C476 C477 C478 C479 C480 C481 C482 C483 C484 C485 C486 C487 C488 C489 C490 C491 C492 C493 C494 C495 C496 C497 C498 C499 C500 C501 C502 C503 C504 C505 C506 C507 C508 C509 C510 C511 C512 C513 C514 C515 C516 C517 C518 C519 C520 C521 C522 C523 C524 C525 C526 C527 C528 C529 C530 C531 C532 C533 C534 C535 C536 C537 C538 C539 C540 C541 C542 C543 C544 C545 C546 C547 C548 C549 C550 C551 C552 C553 C554 C555 C556 C557 C558 C559 C560 C561 C562 C563 C564 C565 C566 C567 C568 C569 C570 C571 C572 C573 C574 C575 C576 C577 C578 C579 C580 C581 C582 C583 C584 C585 C586 C587 C588 C589 C590 C591 C592 C593 C594 C595 C596 C597 C598 C599 C600 C601 C602 C603 C604 C605 C606 C607 C608 C609 C610 C611 C612 C613 C614 C615 C616 C617 C618 C619 C620 C621 C622 C623 C624 C625 C626 C627 C628 C629 C630 C631 C632 C633 C634 C635 C636 C637 C638 C639 C640 C641 C642 C643 C644 C645 C646 C647 C648 C649 C650 C651 C652 C653 C654 C655 C656 C657 C658 C659 C660 C661 C662 C663 C664 C665 C666 C667 C668 C669 C670 C671 C672 C673 C674 C675 C676 C677 C678 C679 C680 C681 C682 C683 C684 C685 C686 C687 C688 C689 C690 C691 C692 C693 C694 C695 C696 C697 C698 C699 C700 C701 C702 C703 C704 C705 C706 C707 C708 C709 C710 C711 C712 C713 C714 C715 C716 C717 C718 C719 C720 C721 C722 C723 C724 C725 C726 C727 C728 C729 C730 C731 C732 C733 C734 C735 C736 C737 C738 C739 C740 C741 C742 C743 C744 C745 C746 C747 C748 C749 C750 C751 C752 C753 C754 C755 C756 C757 C758 C759 C760 C761 C762 C763 C764 C765 C766 C767 C768 C769 C770 C771 C772 C773 C774 C775 C776 C777 C778 C779 C780 C781 C782 C783 C784 C785 C786 C787 C788 C789 C790 C791 C792 C793 C794 C795 C796 C797 C798 C799 C800 C801 C802 C803 C804 C805 C806 C807 C808 C809 C810 C811 C812 C813 C814 C815 C816 C817 C818 C819 C820 C821 C822 C823 C824 C825 C826 C827 C828 C829 C830 C831 C832 C833 C834 C835 C836 C837 C838 C839 C840 C841 C842 C843 C844 C845 C846 C847 C848 C849 C850 C851 C852 C853 C854 C855 C856 C857 C858 C859 C860 C861 C862 C863 C864 C865 C866 C867 C868 C869 C870 C871 C872 C873 C874 C875 C876 C877 C878 C879 C880 C881 C882 C883 C884 C885 C886 C887 C888 C889 C890 C891 C892 C893 C894 C895 C896 C897 C898 C899 C900 C901 C902 C903 C904 C905 C906 C907 C908 C909 C910 C911 C912 C913 C914 C915 C916 C917 C918 C919 C920 C921 C922 C923 C924 C925 C926 C927 C928 C929 C930 C931 C932 C933 C934 C935 C936 C937 C938 C939 C940 C941 C942 C943 C944 C945 C946 C947 C948 C949 C950 C951 C952 C953 C954 C955 C956 C957 C958 C959 C960 C961 C962 C963 C964 C965 C966 C967 C968 C969 C970 C971 C972 C973 C974 C975 C976 C977 C978 C979 C980 C981 C982 C983 C984 C985 C986 C987 C988 C989 C990 C991 C992 C993 C994 C995 C996 C997 C998 C999 C1000
L45 L46 L47 L48 L50 L51 L53 L54 L56 L58 L59 L60 L61 L62
CAR SUP
CAR BLA
DEV
(7.2V) CW
(4.1V) CW
(1.77V) CW
(11.36V) CW
5.8V CW
6.5V CW
(.53V)
(.28V)
(.65V)
(4.8V)
(4.2V)
(7.0V)
(7.6V)
(.63V)
(1.57V)
(7.5V)
(7.8V)
(1.28V)
(1.85V)
(1.7V) FM
(1.3V) FM
(1.8V) FM
(3.5V) FM
(6.0V) FM
(1.01V) FM
(.62V) FM
(11.28V) FM
(7.9V) FM
(1.6V) FM
(1.36V) FM
(1.73V) FM
(.57V)
(.66V) FM
(.61V) FM
(.84V) FM
(.67V) FM
(.06V) FM
(2.3V) FM
(3.6V) FM
(4.0V) FM
(5.0V) FM
(6.6V) FM
(7.2V) FM
(7.9V) FM
(.65V) FM
(.33V) FM
(.67V) FM
(1.3V) FM
(.6V) FM
(14.8V) FM LOW
(.6V) FM
(1.7V) FM
(1.8V) FM
(1.01V) FM
(11.8V) FM
(11.8V) FM
(11.8V) FM
(1.8V) FM
(1.13V) FM
(1.5V) FM
(2.1V) FM
(1.16V) FM
(1.56V) FM
(1.08V) FM
(1.59V) FM
(2.2V) FM
(2.4V) FM
(3.2V) FM
(4.5V) FM
(7.2V) FM
(3.9V) FM
(3.2V) FM
(5.8V) FM
(7.5V) FM
(5.3V) FM
(3.0

2SA1015(Y)
2SC1815(Y)
2SC1959(Y)

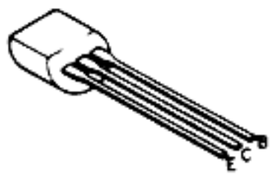

2SA562(Y)
2SC387A
2SC735(Y)
2SC1000(GR)

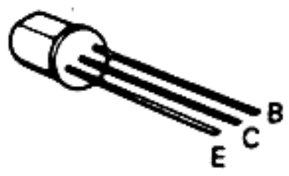

2SA671TD(B)
2SD235(Y)

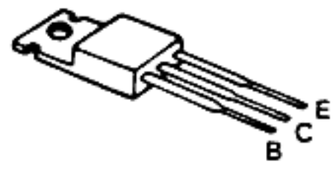

FS-7805M
FS-7808M
μPC14305H

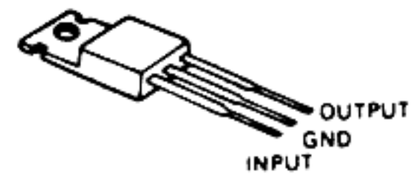

2SC496(Y)

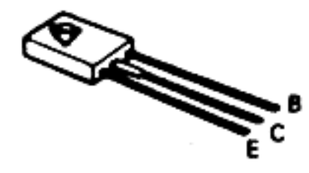

2SK19(GR)

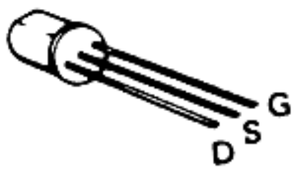

2SK30A(GR)

2SC2407
2SC2549

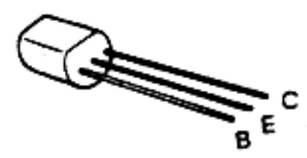

2SK125

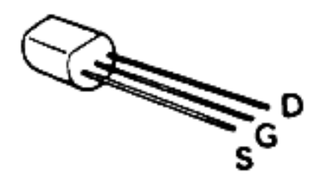

2SC2118

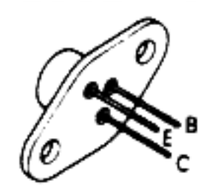

2SC460(B)
2SC1345(E)

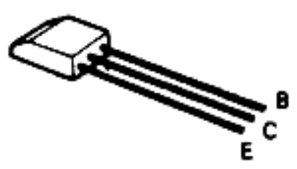

μPC78L05

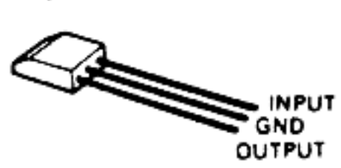

2SC741

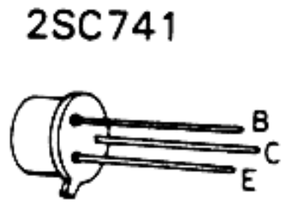

MRF629

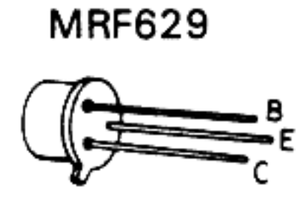

3SK40(L,M)
3SK76
3SK92

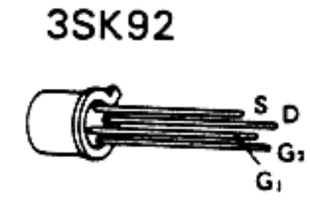

2SC2103A
2SC2380
2SC2381
2SC2391

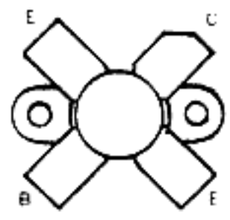

3SK74(L)

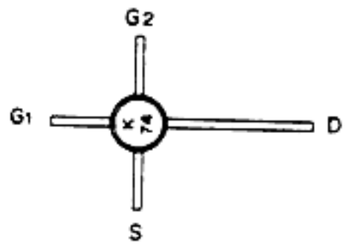

TA7060P
TA7061AP

LM358P
SM6422A
SN16913P

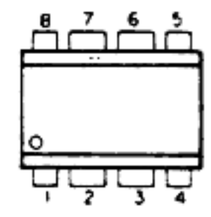

MB3756

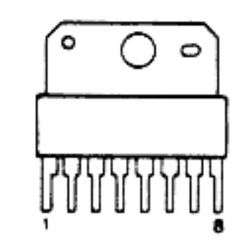

TA7310P

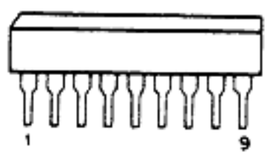

HA1366W

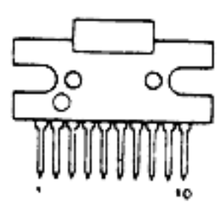

TC9122P

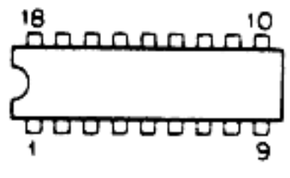

HD74154P

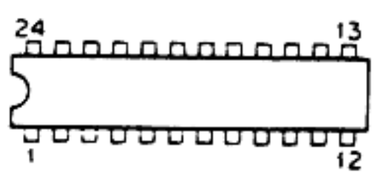

MN9004

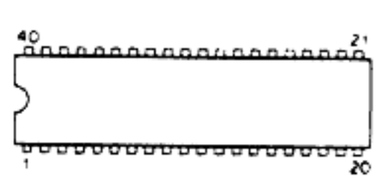

TC4011BP
HD74LS00P
SN74LS03N
HD74LS08P
HD74LS132P
HD74LS02P

HD7404P
HD74LS30P
TD3409AP
SN74LS02N
HD74LS10P
HD74LS03P

SN74LS00N
HD74LS04P
HD74LS32P
HD74LS20P
HD74LS11P
MC4044P
TD3490BP

SN74LS247N
MC14049B
HD74LS151P
MN1201A
HD74221P
TD34192BP

HD74LS42P
HSM5507RS
HD74LS75P
HD74LS157P
SN74221N
MC14568B

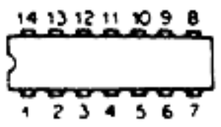

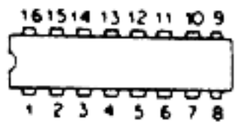

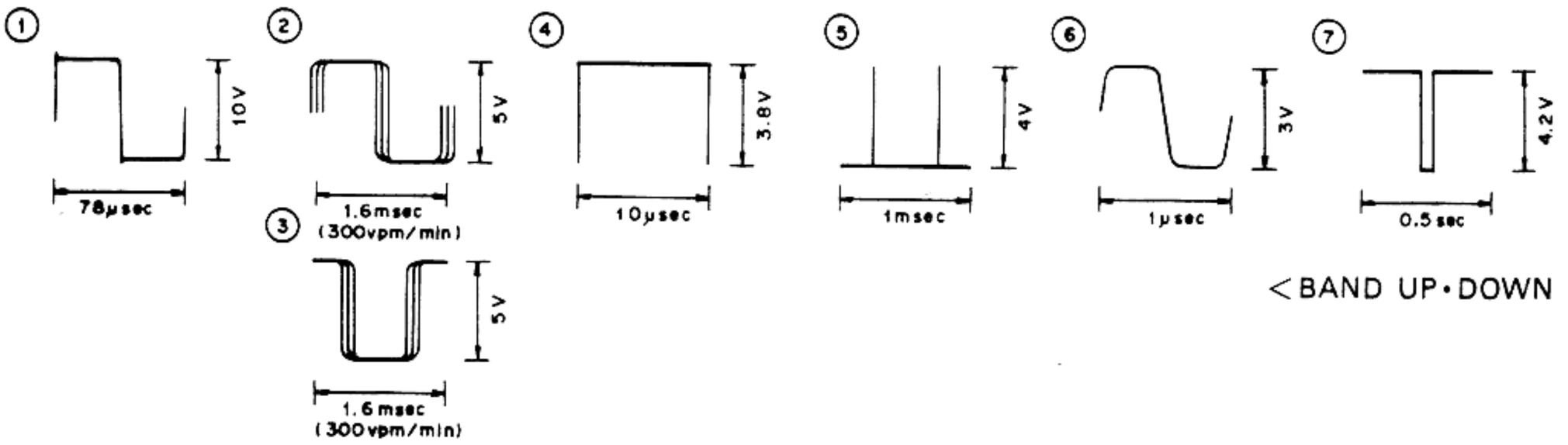

<V1, V3 PHASE DIFFERRENCE 90°>

<BAND UP•DOWN FUNCTION>

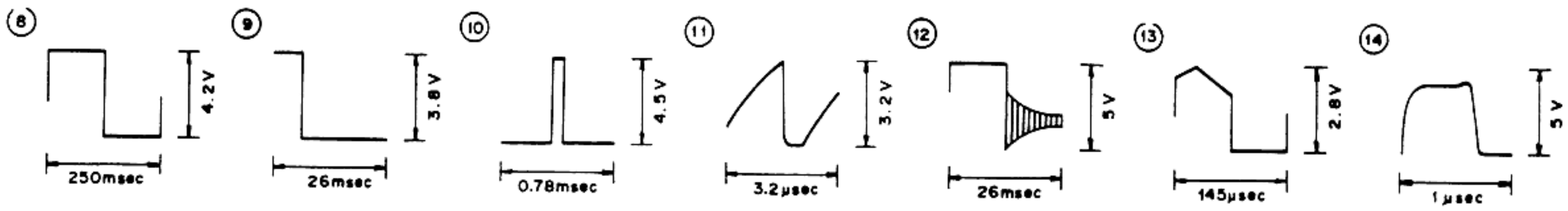

<SCAN FUNCTION> <BAND UP•DOWN FUNCTION>

<BAND UP•DOWN FUNCTION>

CIRCUIT DIAGRAM

Signal — — — **Control** **Common DC line**

PLL ASS'Y, ENCODER ASS'Y, DIGITAL, DISPLAY and 6KEY SW Unit.

ENCODER ASSY UNIT (X60-1080-61)
(X54-1400-00)

Q2,3 : PH102(R)

IC1 : LM358P or LM358N
IC2 : MC14049B
D2,3 : SEL101R(B or C)

(X52-1120-61)
(X41-1160-00)

PLL ASSY UNIT (X60-1050-00)

Q1,2,3 : 2SC460(B)
Q4,5,7 : 2SC735(Y)
Q6 : 2SC1000(GR)

IC1 : SN16913P
IC2 : TA7060P
IC3 : TA7310P
IC4 : TD34192BP
IC5 : SM6422A
IC6 : MC4044P
IC7 : TD3409AP
IC8 : TD3490BP

PLL (A) UNIT (X50-1530-00)

PLL (B) UNIT (X50-1540-00)

Q1,2,3 : 2SK19(GR)
Q4,5 : 2SC460(B)
Q6,7 : 2SC1000(GR)
Q8 : 2SK30A(GR)

D1 : IS1658-2
D2 : IS2208
D3,4,6,7 : 1N60
IC1 : SN16913P

IC2 : TA7310P
IC3 : TC9122P
IC4 : MC14566B
TH1 : D33A

VCO UNIT (X50-1520-00)

Q1 : 2SK19(GR)
Q2,3 : 35K40(M)
Q4 : 35K40(L)
Q5,9 : 2SC1815(Y)
Q6 : 2SA1015(Y)
Q8 : 2SC735(Y)

D1 : IS2208
D2 : IN60
D3,4 : IS2588

6KEY SW. UNIT

SW1 SLOW -FAST RIT
SW2
SW3 SCAN
SW4 SEARCH
SW5 LOCK
SW6 MEMORY

Q1 : FS-7808M
Q2 : FS-7805M

DISPLAYUNIT (X54-1390-00)

9-BT-12

FAST TND

BAND SWITCH

DIGITAL UNIT (X54-1460-61)

IC1-a~c : HD74LS10P
IC2-a~d : HD74LS00P
IC3 : SN74LS247N
IC4 : HD74LS42P
V1 : 9-BT-12
Q1,2 : 2SC1959(Y)
Q3~17 : 2SA1015(Y)
D1~4 : IS1555
D10~32 : IS1555
D5 : WZ-071
D6~9 : SEL-105W

IC1,2	HD74LS03P OR SN74LS03N	IC7,12	HD74LS04P	IC26,27,28,29	HD74LS151P
IC3,6,9,11,36	HD74LS00P OR SN74LS00N	IC17	HD7404P	IC30,31	HD74LS75P
IC4,19	HD74LS08P	IC18	HSM5507RS	IC32,33	MN1201A
IC5	HD74LS10P	IC15,16,21	HD74LS20P	IC34,35	HD74LS157P
IC8	HD74LS132P	IC20	HD74LS11P	IC37	HD74221P OR SN74221N
IC10	HD74LS32P	IC22,23,24	HD74LS30P	IC38	MN9004
IC14	HD74LS02P OR SN74LS02N	IC25	HD74154P	IC39	μPC78L05

02-1

02-2

REFERENCE DATA(EXAMPLE)

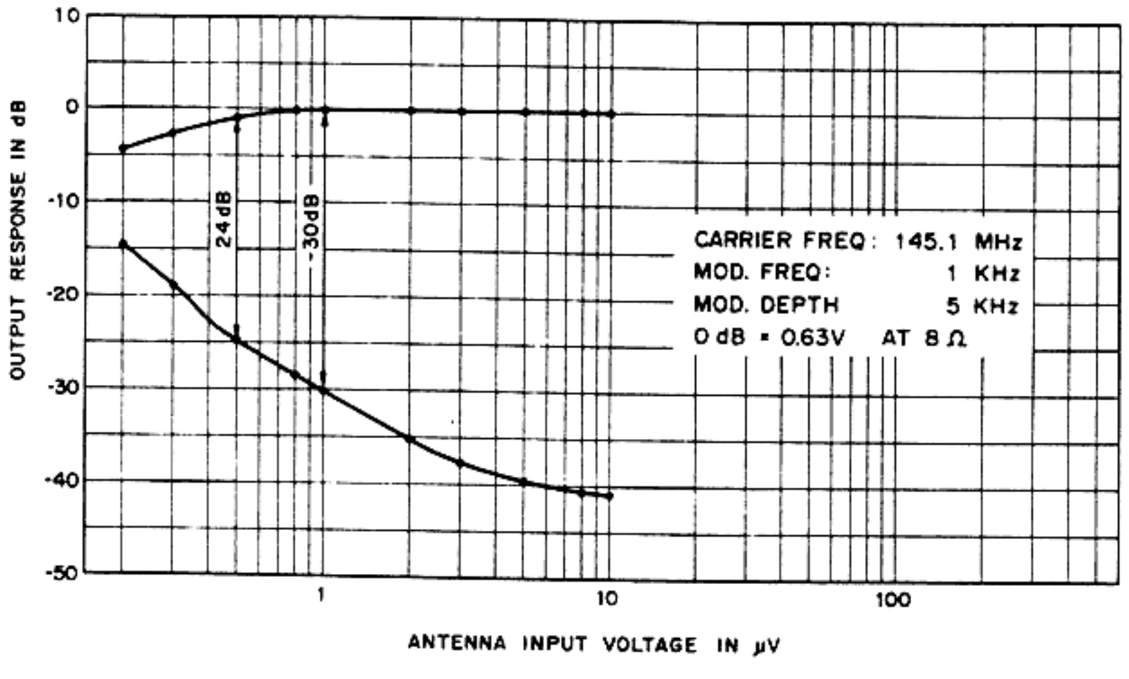

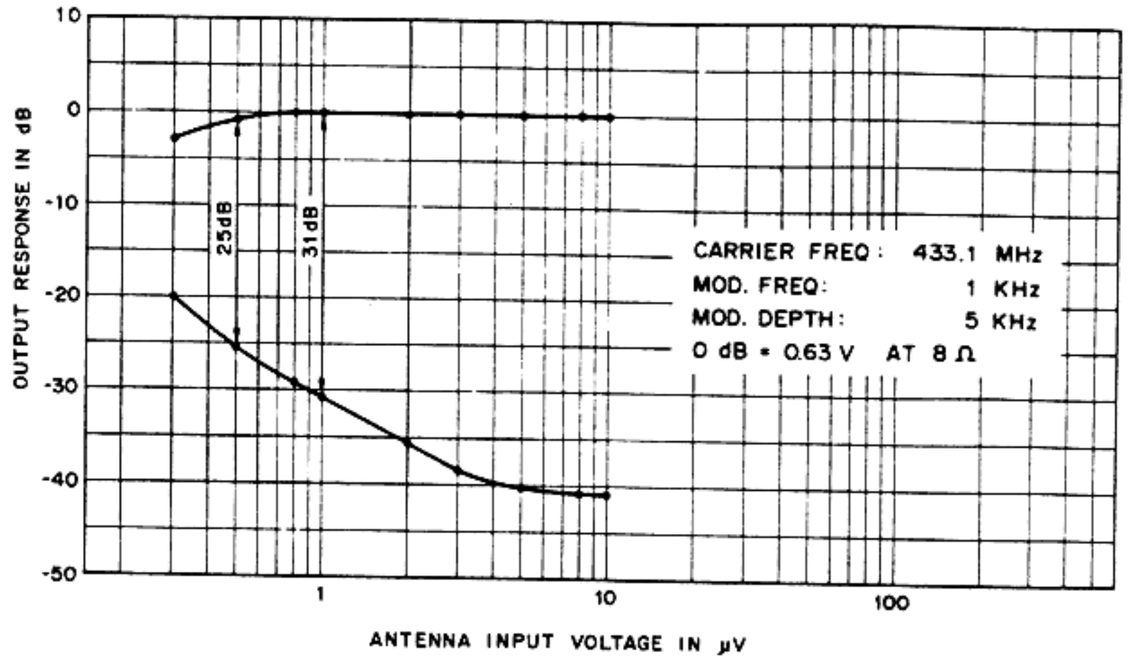

Signal to Noise Ratio and Output
VS Antenna Voltage (**144MHz**) (**FM**)

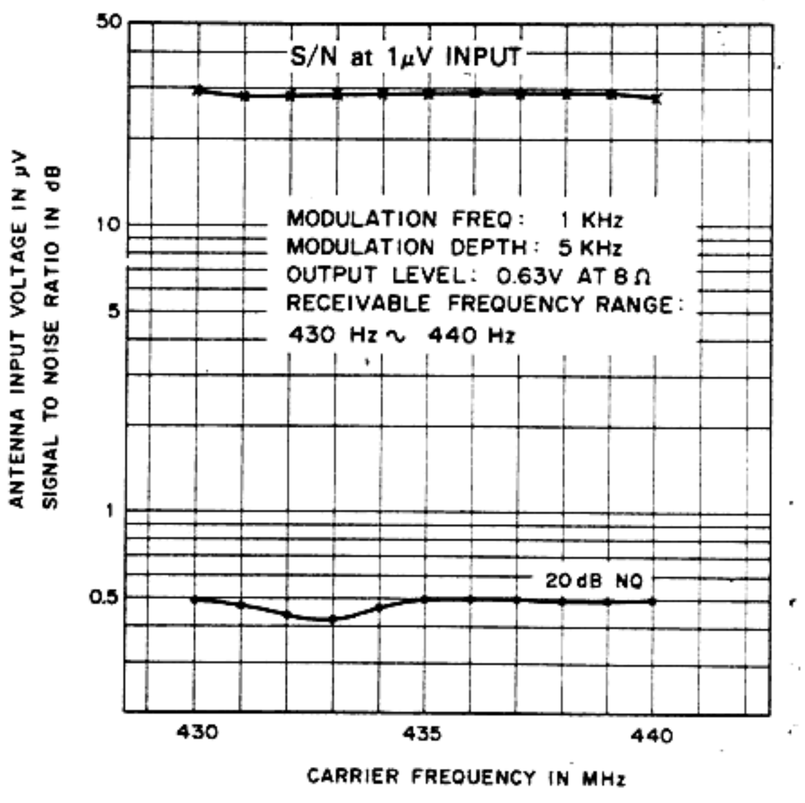

RX Sensitivity
(20dB NQ) (430MHz)

Signal to Noise Ratio and Output Level
VS Antenna Input Voltage (**430MHz**) (**FM**)

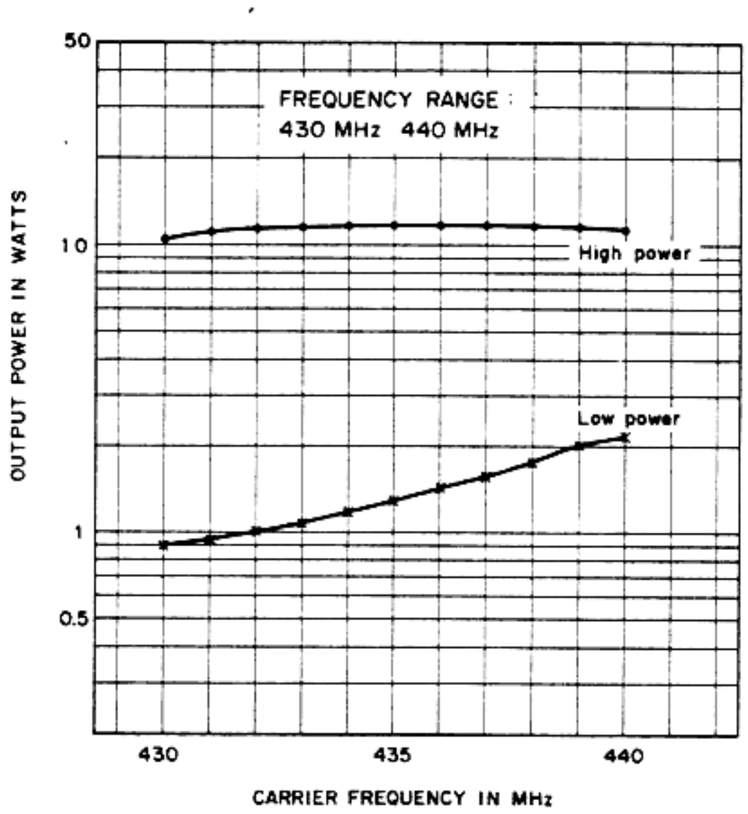

Example of Transmission Output
(430MHz)

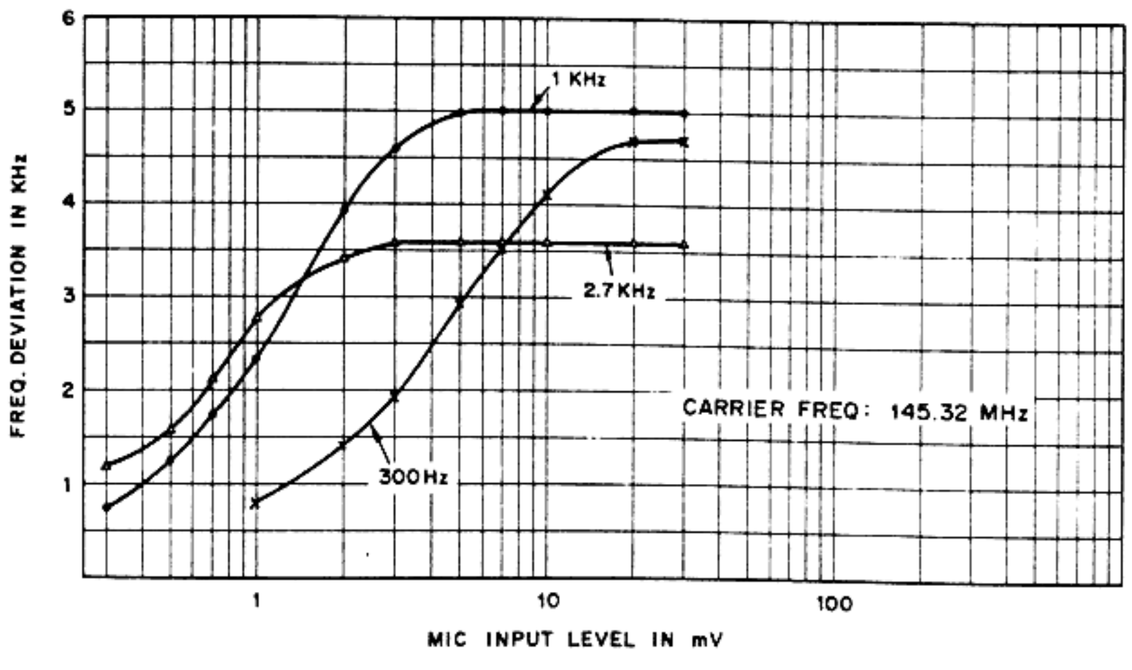

Deviation VS MIC input (**144MHz**)

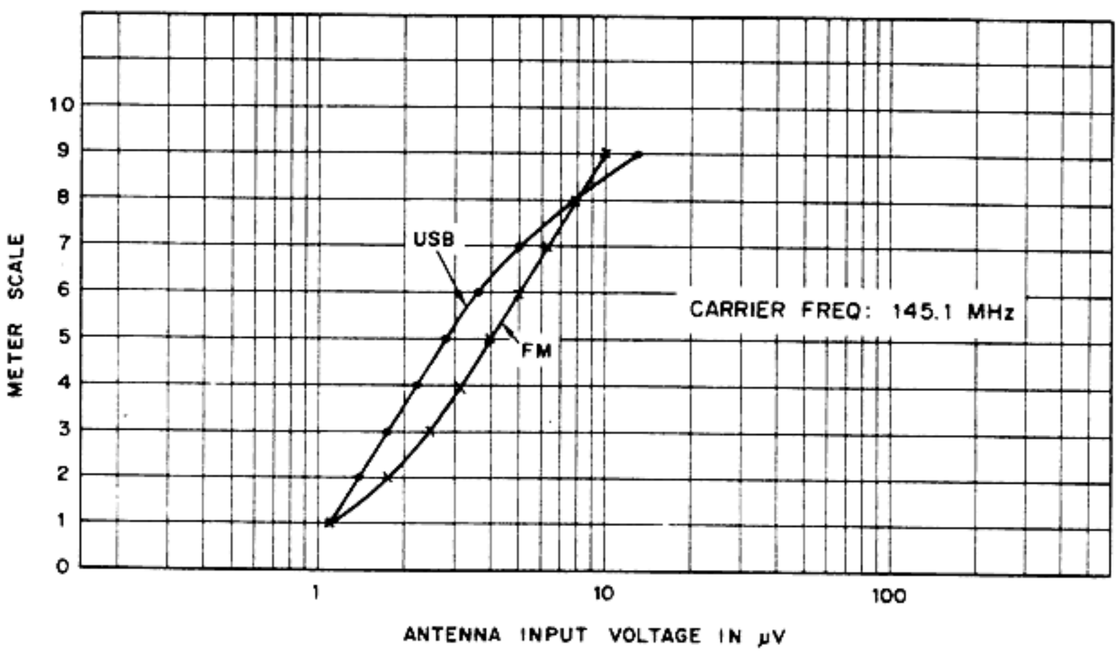

S meter sensitivity (**144MHz**)

Common
Transmission
Reception

MIC-VR Unit (X 53-1080-00)
MIC
Q1 MIC AMP 2SC 2000 GR
SSB MIC
Q3 AF AMP 2SC 1815 Y
Q4 AF AMP 2SC 1815 Y
CAR VR
VOX GAIN
VOX DELAY

Encoder Unit (X60-1080-61)
Photo-sensing Unit (X54-1400-61)
Pulse Generator Unit (X52-1120-61)

Digital Unit (X54-1460-61)

Display Unit (X4-1390-00)

6 Key Switch Unit (X 41-1160-00)
SLOW FAST ON OFF ON OFF ON OFF ON OFF ON OFF
SW1 SLOW FAST
SW2 RIT
SW3 SCAN
SW4 SEARCH
SW4 LOCK
SW5 MEMOLY

Carrier Unit (X 50-1510-00)
8.8315MHz
8.830MHz
Q1 OSC 2SC B 460
Q2 BUFFER 2SC B 460

IF Unit (X 48-1270-00)
D6 9 BM IN60
Q11 BUFFER 3SK74 L
XF 8.830MHz
Q12 IF AMP 3SK74 L
Q13 MIX 3SK74 L
Q14 MIX 3SK74 L
Q15 IF AMP 3SK74 L
21.6MHz
30.430 MHz
Q16 OSC 2SC460 B
Q10 2SC 460 B
SWITCHING
D14 17 IS1587
Q22 SWITCHING 2SC1815 Y
Q21 AMP NOISE 2SC 460 B
Q23 AGC 2SC18 5 Y
Q19 NOISE AMP 2SC 460 B
Q20 2SC 460 B
NOISE AMP
Q18 BUFFER 2SK19 GR
Q28 AGC AMP 2SC1815 Y
AGC
AGC DECT
Q29 ALC
Q27 BUFFER 2SC 1815 Y
SWITCH
D21 24 IN60 BM
Q42 AMP 1815 Y
Q26 IF AMP 3SK74 L
Q24 IF AMP 3SK74 L
Q5 SWITCHING
Q1 AF AMP 2SC1815 Y
AF VR
SQU VR
SCAN.FWD SW
Q44 AF AMP 2SC1815 Y
Q43 AF AMP 2SC1815 Y
FM DET
LIM Q34 2SC 460 B
LIM Q33 2SC 460 B
IF AMP Q32 2SC 460 B
IF AMP Q31 2SC 460 B
Q30 IF AMP 2SC 460 B
CFI CFL455F
455kHz
Q48 SWITCHING 2SC1815 Y
Q47 DET 2SC1815 Y
Q46 NOISE AMP 2SC1815 Y
Q45 NOISE AMP 2SC1815 Y
Q38 AF AMP TA 7061AP
FILTER
DEV
21.6 MHz
Q40 2SC460 B
Q41 BUFFER 2SC460 B

AF VR Unit (X53-1090-61)
Q4 2SC1815 Y
Q2 2SC1815 Y
Q5 2SC1815 Y
Q3 2SC1815 Y
RIT
SWITCHING
IC1 TC 4011BP
RF GAIN

AF-VOX Unit (X49-1120-61)
SIDE TONE VR
Q12 SIDE TONE OSC 2SC1815 Y
FM MIC
KEY
SP
Q1 POWER AMP HA 1366W
Q6 SWITCHING 2SA 1015 GYT
Q5
Q3 SWITCHING 2SC1815 Y
Q2 ANTI VOX AMP 2SC1815 Y
Q4 VOX AMP 2SC1815 Y
Q13 BUZZER OSC 2SC 1815 Y
BZ
ANTI VOX
Q10 SWITCHING 2SC 1815 Y
Q9 SWITCHING 2SC 1815 Y
Q8 SWITCHING 2SC 1815 Y
Q7 SWITCHING 2SC 1815 Y
RL
Q11 SWITCHING 2SC1815 Y
CM

RF Unit (X 44-1270-00)
Q19 SWITCHING 2SA 562
2SC1815 Y
Q18 SWITCHING
ANT SWITCH
Q41 AVR CONT 2SD235
+B
D1. D45 47 MIX
21.6 · 408.4 · 418.4MHz
21.6M
408.4
418.4MHz
D2
D3
122.4 ~ 124.4MHz
Q1 AMP 2SC 2549
L4
Q2 AMP 2SK 125
Q3 AMP 2SC 2407
Q4 AMP MRF 629
MRF 629 AMP Q5
Q11 BUFFER 2SC 384A
Q6 AMP 2SK125
Q7 AMP 2SK 125
Q8 AMP 2SC 2407
Q9 AMP 2SC 741
Q10 BUFFER 2SK125
Q25 MIX 3SK74 (L)
Q24 IF AMP 3SK74 L
MCF 21.6MHz
HET OSC
455KHz
21.6MHz
Q22 MIX 3SK92 or 3SK76
408.4 418.4MHz
Q21 RF AMP 2SK125
L33
Q20 RF AMP 2SC 2549
L30
122.2 ~ 124.4MHz
Q27 2SC460 B
22.055MHz
Q28 RF AMP 3SK40 L
Q29 MIX 3SK40 (L)
Q12 AVR CONT 2SD235
Q15 AVR CONT 2SD235
Q16 SWITCHING 2SC1815 Y
Q13 SWITCHING 2SC1815 Y
Q14 CONT 2SC1815 Y
Q17 CONT 2SC1815 Y
Q36 AMP 2SA1015 Y
Q35 AMP 2SK19 GR
Q34 ALC AMP 2SC1815 Y
Q37 BUFFER 2SK19 GR
Q38 S METER AMP 2SA 1015 Y
AGC
SM

144 ANT
430 ANT

Final Unit Ass'y (X 60-1060-01)
144 Final Unit (X 56-1310-01)
Q1 DRIVE 2SC 2118
Q2 FINAL 2SC 2103A
430 Final Unit (X 56-1320-01)
Q1 PRI DRIVE 2SC 2391
Q2 DRIVE 2SC 2380
Q3 FINAL 2SC 2381
Q4 2SD 235
Q1 AVR CONT 2SD 588

Lever Switch Unit (X 41-1180-00)
TX RX ON OFF ALC PWM ON OFF LOW HIGH
SEND
VOX
METER
NB
LOW POWER

VCO Unit (X 50-1520-00)
PLL ASSY (X 60-1050-00)
PLL(A) Unit (X 50-1530-00)
PLL (B) Unit (X 50-1540-00)

Q1 OSC x 2
Q2 BUFFER
Q5 x 3
Q51 OSC x 2
Q52 BUFFER
286MHz
291MHz

MIX (A) Unit (X 48-1250-00)
Q1 BUFFER
Q2 BUFFER
L6
MIX D1 4

MIX (B) Unit (X 48-1260-00)
Q1 AMP
Q2 AMP
Q3 AMP
408.4MHz ~ 418.4MHz

AVR Unit (X 43-1310-00)
BP BU1 ATX 13.8 14.5 43.5 6 TBL RB UH C8 8.14 8.43
13.8 AC AC
AC 100V

TONE Unit (X52-1110-61)
2SC 458

DIGITAL Unit
Q1 2SC1815 Y SW
Q2 2SC1815 Y SW
5V

CONTROL Unit (X53-1170-60)

TONE Unit (X52-1110-62)
Q1 2SC 458 OSC
Q2 2SC 458 SW

SCHEMATIC DIAGRAM (IF Unit)

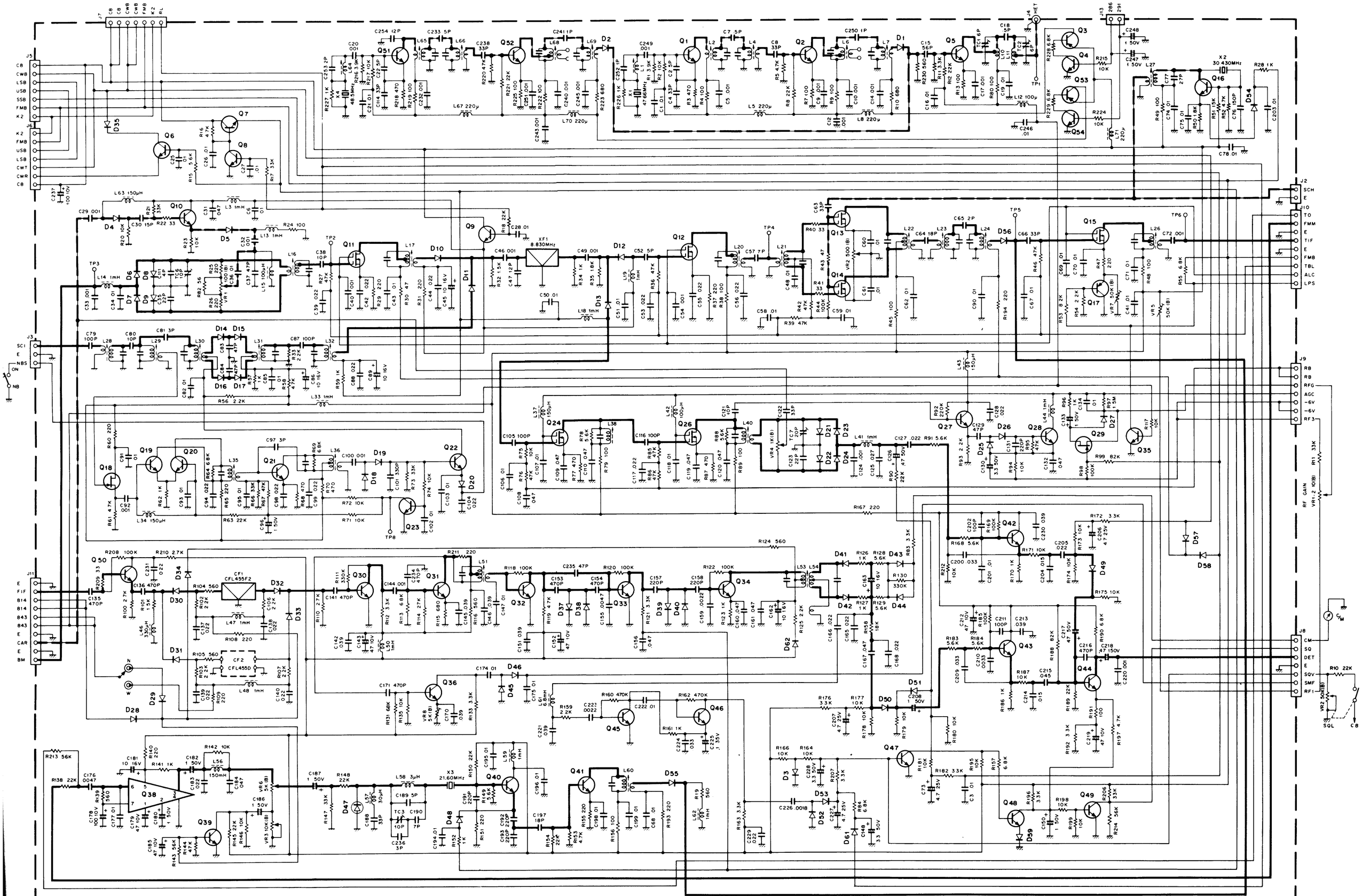

Q1,2,10,16,19~21,30~34, 40,41,50~52	: 2SC460(B)	Q11~15,24,26	: 3SK74 (L)	D1,2	: 1S2588	D5,10~17,30~33	: 1S1587
Q3,17,53	: 2SA1015(Y)	Q18	: 2SK19 (GR)	D3	: 1S1212	D6~9,18,19,21~26, 41~46,52,53	: 1N60
Q4,6~9,22,23,27,28, 35,39,42~49	: 2SC1815(Y)	Q29	: 2SK30A(O)	D4,27~29,34,35, 37~40,48~51, 54~59,61,62	: 1S1555	D20	: MV-13
Q5	: 2SC387A	Q36	: 2SC1345(E)			D47	: 1S2208
		Q38	: TA7061AP				

SCHEMATIC DIAGRAM (RF Unit)

Q2,6,7,10,21	: 2SK125
Q3.8	: 2SC2407
Q4.5	: MRF629
Q9	: 2SC741
Q11	: 2SC387A
Q12.15.41	: 2SD235
Q13.14.16~18.23 30.31.33.34.39.40	: 2SC1815(Y)
Q19	: 2SA562(Y)
Q1,20	: 2SC2549
Q22	: 3SK92 or 3SK76
Q24,25	: 3SK74(L)
Q26,36,38	: 2SA1015(Y)
Q27	: 2SC460(B)
Q28,29	: 3SK40(L)
Q32	: 2SC735(Y)
Q35,37	: 2SK19(GR)
Q42	: 2SC496(Y)
D1,45~47	: 1SS97
D2,3,8,9	: 1S2588
D4~7,25	: 1N60
D12,23,24,35~37	: 1S1587
D15,18,26,27,29~31 41,42,44,49	: 1S1555
D16,19,32	: XZ060
D20	: XZ132
D28	: XZ117
D40,43	: MU13

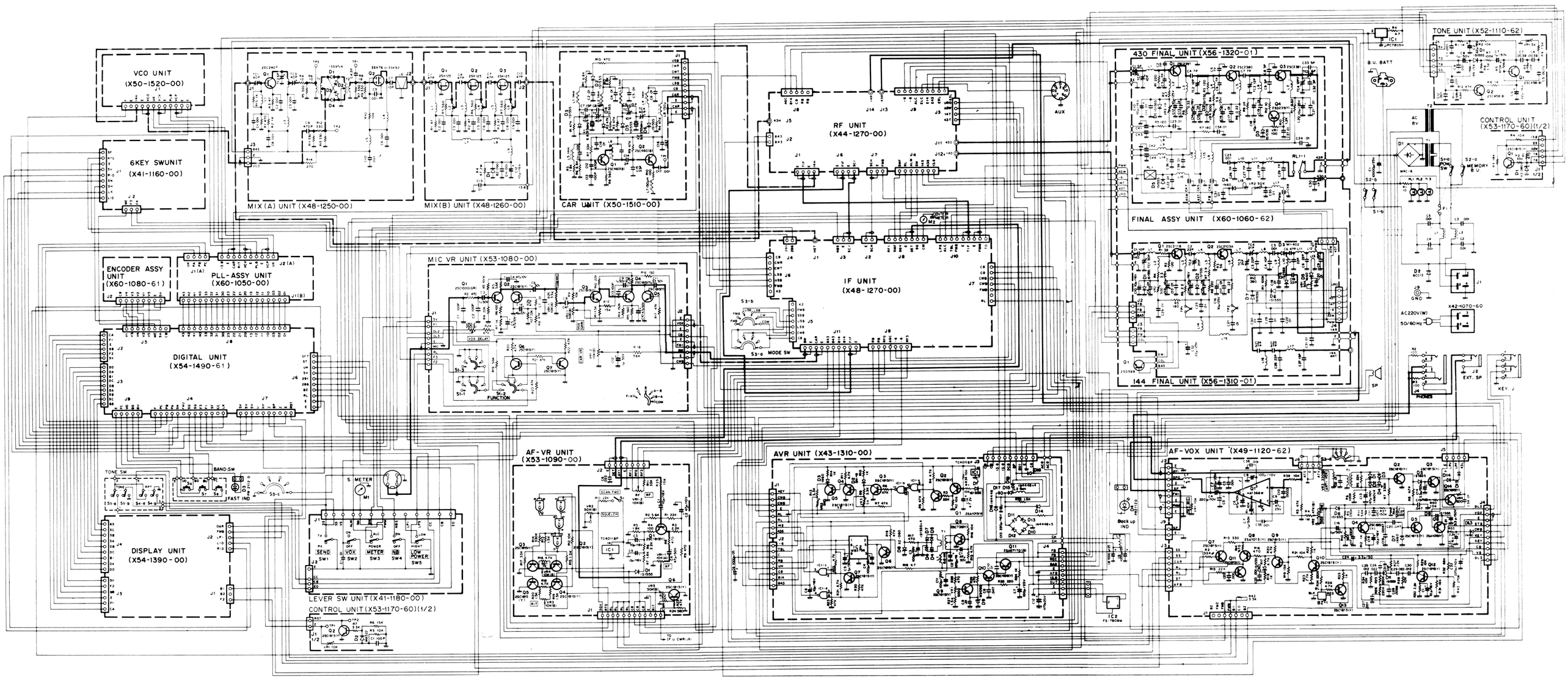
VCO UNIT (X50-1520-00)
6KEY SWUNIT (X41-1160-00)
MIX(A) UNIT (X48-1250-00)
MIX(B) UNIT (X48-1260-00)
CAR UNIT (X50-1510-00)
RF UNIT (X44-1270-00)
430 FINAL UNIT (X56-1320-01)
FINAL ASSY UNIT (X60-1060-62)
144 FINAL UNIT (X56-1310-01)
TONE UNIT (X52-1110-62)
CONTROL UNIT (X53-1170-60)(1/2)
ENCODER ASSY UNIT (X60-1080-61)
PLL-ASSY UNIT (X60-1050-00)
DIGITAL UNIT (X54-1490-61)
MIC VR UNIT (X53-1080-00)
IF UNIT (X48-1270-00)
AF-VR UNIT (X53-1090-00)
AVR UNIT (X43-1310-00)
AF-VOX UNIT (X49-1120-62)
DISPLAY UNIT (X54-1390-00)
LEVER SW UNIT (X41-1180-00)
CONTROL UNIT (X53-1170-60)(1/2)
TONE SW
BAND SW
FAST IND
S METER
SEND SW1
VOX SW2
METER SW3
NB SW4
LOW POWER SW5
MODE SW
FUNCTION
AUX
B.U. BATT
AC 8V
MEMORY B.U.
AC220V(W) 50/60Hz
X42-1070-60
EXT. SP
KEY J
PHONES
SP
Back up IND

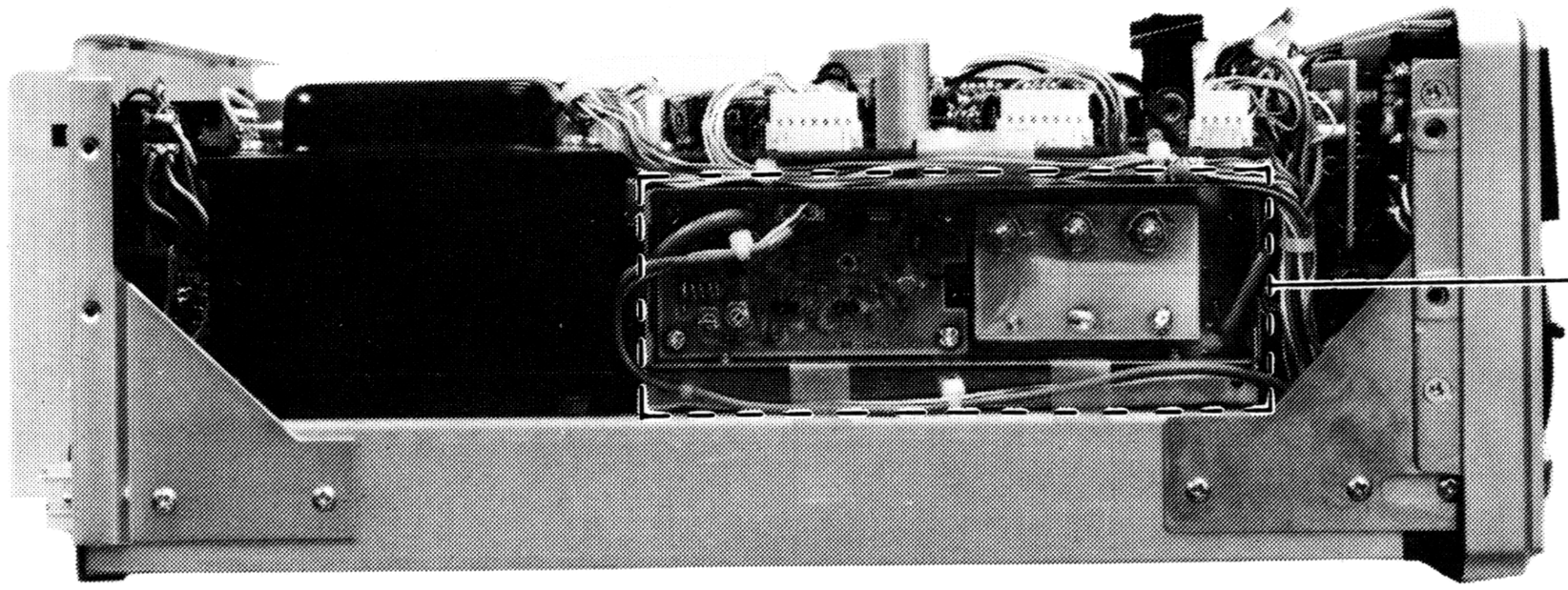
MIX (A) UNIT
(X48-1250-00)

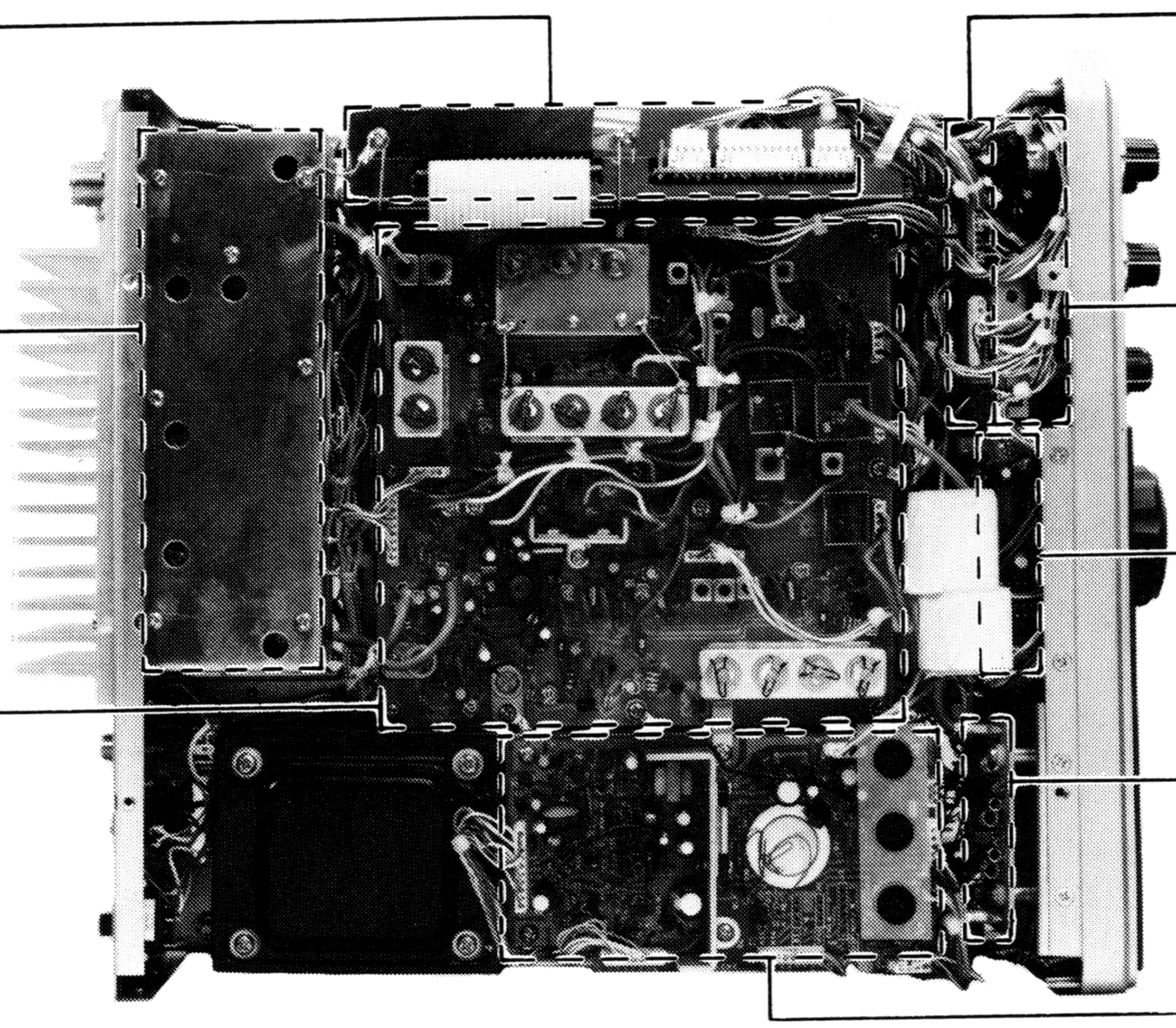
PLL Unit Ass'y
(X-60-1050-00)
AF VR Unit
(X53-1090-61)
430 Final Unit
(X56-1320-01)
MIC-VR Unit
(X53-1080-00)
Display Unit
(X54-1390-00)
RF Unit
(X44-1270-00)
(Lower side)
Digital Unit
(X54-1490-61)
MIX (B) UNIT
(X48-1260-00)
AF-VOX Unit
(X49-1120-61)

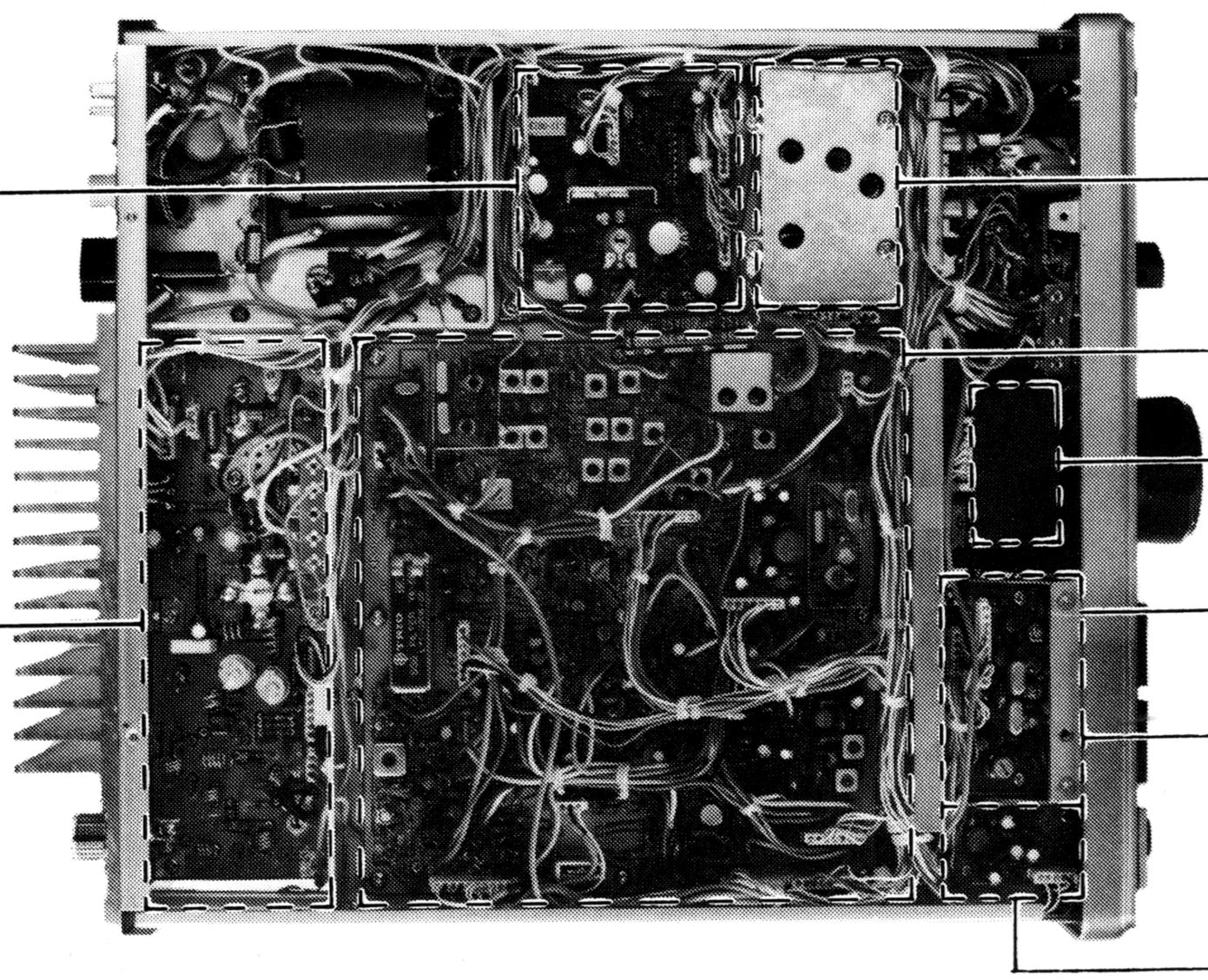
AVR Unit
(X43-1310-00)
VCO Unit
(X50-1520-00)
IF Unit
(X48-1270-00)
Encoder Unit
(X60-1080-61)
144 Final Unit
(X56-1310-01)
CAR Unit
(X50-1510-00)
6 Key Switch Unit
(X41-1160-00)
Tone Unit
(X52-1110-61)

SPECIFICATIONS

GENERAL

Frequency Range	144.0 ~ 146.0 MHz	
	430.0 ~ 440.0 MHz	
Mode	SSB (USB, LSB), CW, FM	
Voltage Requirements	220V AC, 50/60 Hz	
	12.0 ~ 16.0V DC (13.8V DC nominal)	
Power Consumption	Receive (no signal): 45 watts (220V AC), 1.5A (13.8V DC)	
	Transmit: 130 watts (220V AC), 6A (13.8V DC)	
Semiconductor Complement	Transistors:	161
	FETs:	31
	ICs:	63
	Diodes:	224
Dimensions	290 (W) × 124 (H) × 320 (D) mm	
	(11"-7/16) × (4"-7/8) × (12"-5/8)	
Weight	11 kg (24.2 lbs)	

TRANSMITTER SECTION

RF Power Output	SSB, CW, FM:	10 watts
	FM (LOW):	Approx. 1 watt
Modulation	SSB:	Balanced modulation
	FM:	Variable reactance frequency shift
Maximum frequency deviation (FM)	±5 kHz	
Carrier Suppression	Better than 40 dB	
Unwanted Sideband Suppression	Better than 40 dB	
Suprious Radiation	Better than −60 dB	
Microphone Impedance	500 ~ 600Ω	
Antenna Impedance	50Ω	
AF Response of Transmitter (SSB)	400 ~ 2600 Hz (−9 dB)	
RPT Tone Frequency	1750 Hz	

RECEIVER SECTION

Receiver Sensitivity	SSB, CW:	0.25 μV for 10 dB (S+N)/N
	FM:	1 μV for 30 dB (S+N)/N
		0.4 μV for 20 dB
Intermediate Frequency	1st: 21.6 MHz	
	2nd: 8.83 MHz (144 MHz FM 455 kHz)	
Image Rejection	1st IF: Better than 60 dB	
	2nd IF: Better than 50 dB	
IF Rejection	Better than 70 dB	
Squelch Sensitivity	0.25 μV	
Audio Output	2.5 watts (with less than 10% distortion) into a 4 ohm load	
Receiver Selectivity	SSB, CW:	2.4 kHz (−6 dB)
		4.8 kHz (−60 dB)
	FM:	12 kHz (−6 dB)
		24 kHz (−60 dB)
Frequency Stability	Within ±1 kHz during the first hour after 1 minute of warmup	
	Within 150 Hz during any 30 minute period after warmup.	

The above specifications are subject to change without notice for improvement.

A product of
TRIO-KENWOOD CORPORATION
6-17, 3-chome, Aobadai, Meguro-ku, Tokyo 153, Japan

TRIO-KENWOOD COMMUNICATIONS, INC.
1111, West Walnut Street, Compton, California, 90220, U.S.A.
TRIO-KENWOOD COMMUNICATIONS, GmbH
D-6374 Steinbach TS, Industriestrasse 8A, West Germany
TRIO-KENWOOD (AUSTRALIA) PTY. LTD.
30 Whiting Street, Artarmon, Sydney N.S.W. Australia 2064

© Printed in Japan B51-0894-00/400(G)